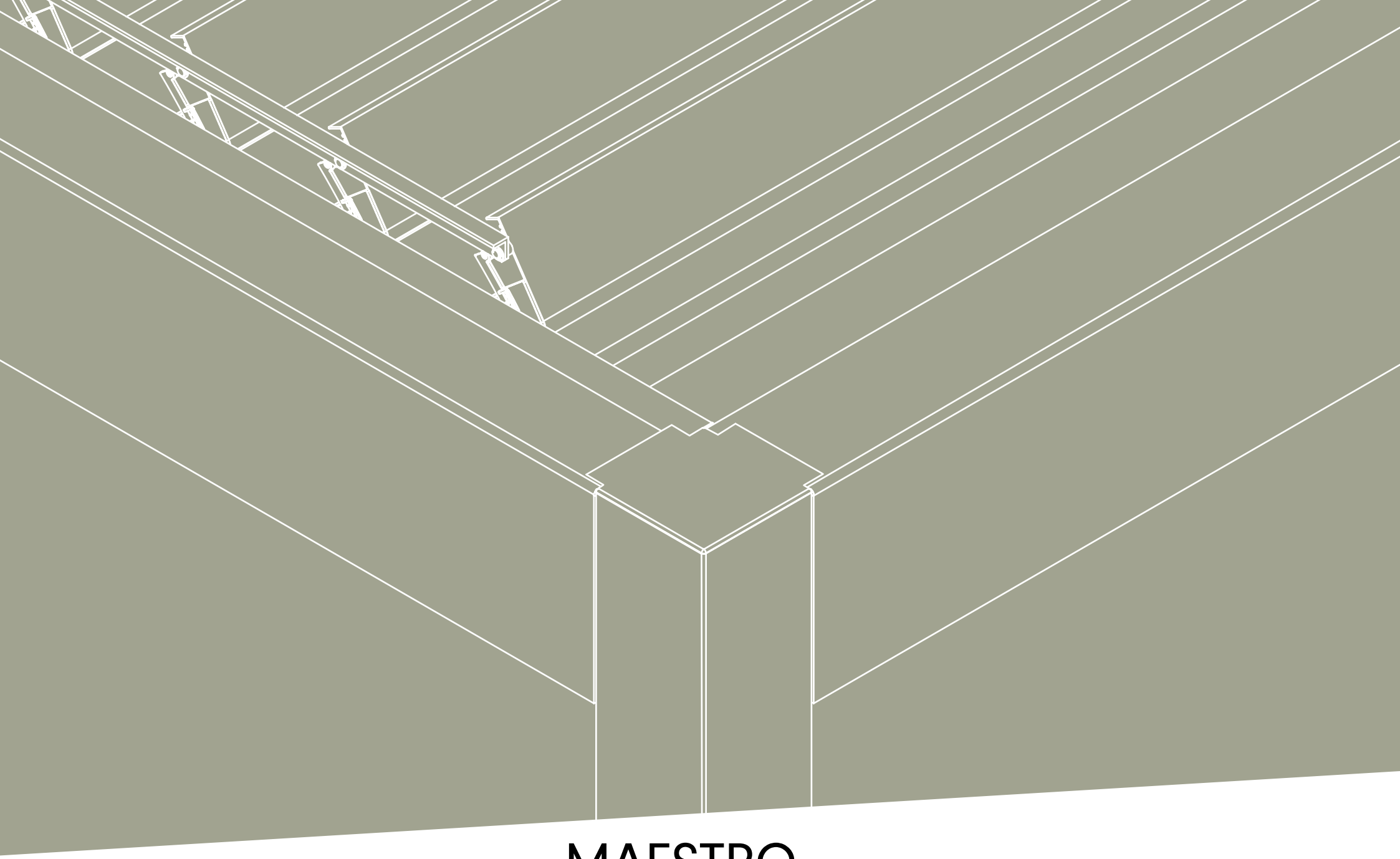

MAESTRO BIOCLIMATICS

Installation manual

Corradi
OUTDOOR LIVING SPACE

TRANSLATION OF THE ORIGINAL INSTRUCTIONS

Dear installer,
In this manual you will find all recommendations for a fast and precise installation of the components.
Sure of your expertise in the use of our products, we recommend you to strictly respect our indications.
We are also willing to accept suggestions and useful information on possible improvements both in installation techniques and form of this manual.
We would like to remind you to always consider the installation conditions by checking with the most attention the conformity of the chosen materials with the environmental conditions.
It is also a good rule to issue a final declaration of correct installation according to the specifications provided for in this manual, beside the mandatory declarations of conformity required by law, where requested.

MAESTRO is a product by CORRADI S.r.l.
Any technical operation necessary during the installation must be carried out exclusively by skilled and authorised personnel.

Any personal operation (tampering with, technical changes, etc.) performed during the warranty period voids the warranty immediately.

CORRADI S.r.l. reserves the right to apply technical changes to the components or the product, except for the main features, at any time and without notice.

CONTENTS

SYMBOLS....4
CONTROLS AND VERSIONS....6
MATERIAL CHECK, UNPACKING AND PREPARATION....7
1 WALL INSTALLATION....8
2 PILLAR INSTALLATION....12
3 CROSSBEAM INSTALLATION....18
4 GUTTER PROFILE INSTALLATION....28
5 SILICONE APPLICATION AREAS....30
6 MOTOR ASSEMBLY....31
7 MOTOR POWER SUPPLY....33
8 MOTOR LIMIT SWITCH ADJUSTMENT....34
9 COMPENSATION BLADE ASSEMBLY....35
10 CONTROL BLADE ASSEMBLY....36
11 BLADE WITH LIGHT ASSEMBLY....37
12 ASSEMBLY OF BLADES WITH SWIVEL BRACKET SUPPORT....38
13 BLADE ASSEMBLY....39
14 COVER AND ACCESSORY PROFILE ASSEMBLY....42
15 SWIVEL BRACKET PROFILE INSTALLATION....44
16 SUPPLEMENTARY PILLAR....45
17 SCREEN INSTALLATION....46
18 SLIDING GLASS DOORS INSTALLATION....49
19 CASING INSTALLATION....50
20 WALL-MOUNTED OPTION....54
21 WALL-MOUNTED OPTION WITHOUT PILLARS....55
22 SILICONE APPLICATION EXTERNAL AREAS....56
ELECTRIC SYSTEM....57
TABLES....58
EXAMPLE - DETERMINATION OF THE WIND RESISTANCE ACCORDING TO THE LOADS AND THE DOWELS....59

SYMBOLS

SYMBOLS

These symbols are used to draw the installer's attention to specific operating conditions or subjects of particular importance for the safety of persons or the integrity of the product.

Attention: general operating note

Attention: pay utmost attention to the indications provided herein

Attention: general hazard - possibility of damage to people, property, components

Attention: electrical hazard

Attention: hand crushing hazard

Contact CORRADI S.r.l. or an authorised retailer

GENERAL PRECAUTIONS

Before performing any installation, maintenance or cleaning operation, make sure to have understood the content of this manual. Failure to respect the instructions provided herein relieves CORRADI S.r.l. from any responsibility on damages to people, animals, property and/or components. The installation personnel must thoroughly respect the local prevailing accident-prevention regulations.

The electric connections for handling, installing automation accessories etc. must be performed exclusively by skilled personnel.
If the structure is connected to a motor and installed at less than 250 cm from the ground, the control button must be a "dead-man" switch button and the opening and closing movements must be perfectly visible.

Should you find any inconsistency, please contact CORRADI S.r.l.

GENERAL SAFETY WARNINGS

Intended use

Any misuse of MAESTRO relieves CORRADI S.r.l. from any responsibility.

Please remember that each moving part can represent a hazard.

Do not remove any casing after the installation; for structures provided with motors, we recommend cutting off the power supply before performing any maintenance operation.

We recommend not to intervene on a moving part and make sure that no one is close to the structure before reactivating it after a technical and maintenance operation.

During the installation, maintenance, repair or adjustment operations, it is compulsory to cut off the power supply.

We recommend putting a warning sign on the power supply main switch with the following indication:
"Attention! Do not touch. Service personnel at work".

WARNINGS AND CAUTIONS

The installation personnel (installers, electricians, etc.) must have the specific skills and mental and physical requirements necessary to perform the assigned tasks.
Upon installation, always perform preventive checks of the correct assembly, operation and efficiency of the manual and electric controls.
According to the profile length and weight, handle the same with the help of the suitable number of operators specified by the regulations.

In case of faults, stop the movements immediately and contact the technical service of CORRADI S.r.l.

The use of non-original spare parts, tampering with and unauthorised changes relieve CORRADI S.r.l from any responsibility on damages to people, property or animals.
It is strictly forbidden to tamper with the connections, supports, runners, retainers, control and transmission units, and any other component of MAESTRO.

ATTENTION
All indicated measures (unless otherwise specified) are expressed in centimetres.

PRELIMINARY CHECKS
When receiving the packed goods and before proceeding with the installation, check the material integrity and the presence of all components necessary for the installation.
Thoroughly follow the information provided in the paragraph "Material check, unpacking and preparation".

STORAGE AND MAINTENANCE
The packed components must be handled following consolidated procedures that prevent damages to the product.
Before the installation, the goods can be stored, if necessary, in suitable areas to prevent damages and deterioration.

In case of faults, contact CORRADI S.r.l. or an authorised retailer

CONTROLS AND VERSIONS

WALL-MOUNTED CONTROL (BY THE CUSTOMER)

To orient the cover blades, press the button on the upper or lower side; when releasing it (neutral central position), the blades will stop in the desired position.

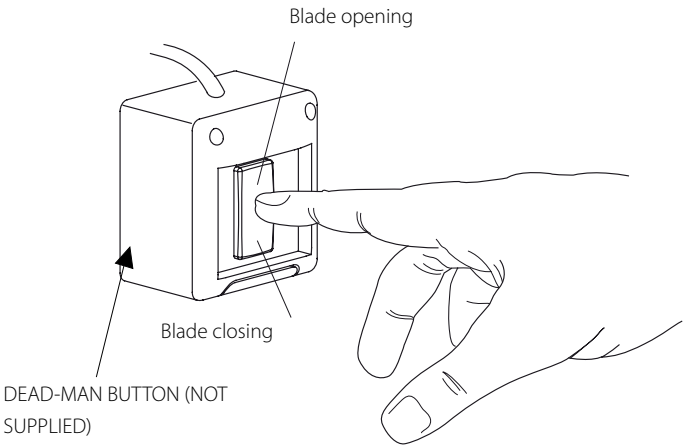

REMOTE CONTROL

MAESTRO has a motor with remote control. To open, close, and stop the blades use the relevant buttons (see figure).

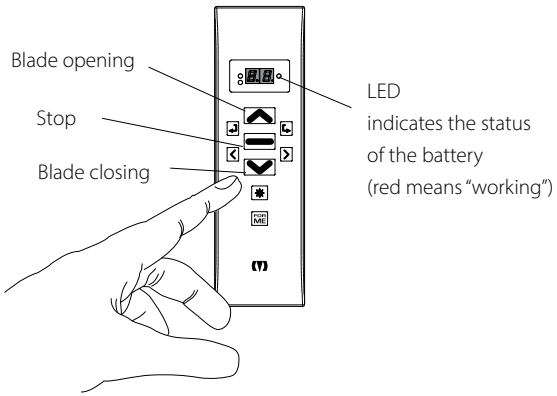

The use of the multi-channel (No. 10 channels) remote control allows checking also accessories (optional) like lights and side closures.

Replacement of the remote control battery 1

To replace the battery, remove the screw on the rear side of the remote control and replace it with a similar model (12 Vdc alkaline battery, mod. 23 AE).

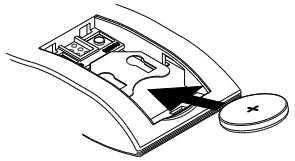

Replacement of the remote control battery 2

This transmitter is supplied by a 3 Volt CR2032 battery. To replace the battery, open the flap on the rear side, slide out the exhausted battery and replace it with a new one respecting the polarity. Then fit the flap in the relevant seat.

Pay attention not to invert the polarity.
Pay attention not to use a wrong model.
Explosion hazard if the battery is replaced with a model other than the specified one.
Dispose of the used battery in suitable containers.

MATERIAL CHECK, UNPACKING AND PREPARATION

PRELIMINARY INSPECTIONS

MAESTRO is delivered in sturdy packages that protect it from impacts or dents. The package has a label indicating:

- **the manufacturer data**
- **the order number**
- **the recipient name**
- **the customer reference name**
- **the package number**
- **The weight**

Before opening the package, check that the data correspond to the ones you have.

The packages contain the elements and accessories required for the installation and the User manual. Packages weighing between 25 kg and 55 kg must be handled by at least two people.

Note:
there are no retaining elements like screws and dowels since they must be decided by the installer according to the type of mounting (wall-mounting, wood, metal, etc.).

Proceed as follows:
- remove the components from the packages.

Attention:
do not use a cutter to avoid damaging the metal element paint.

1 WALL INSTALLATION

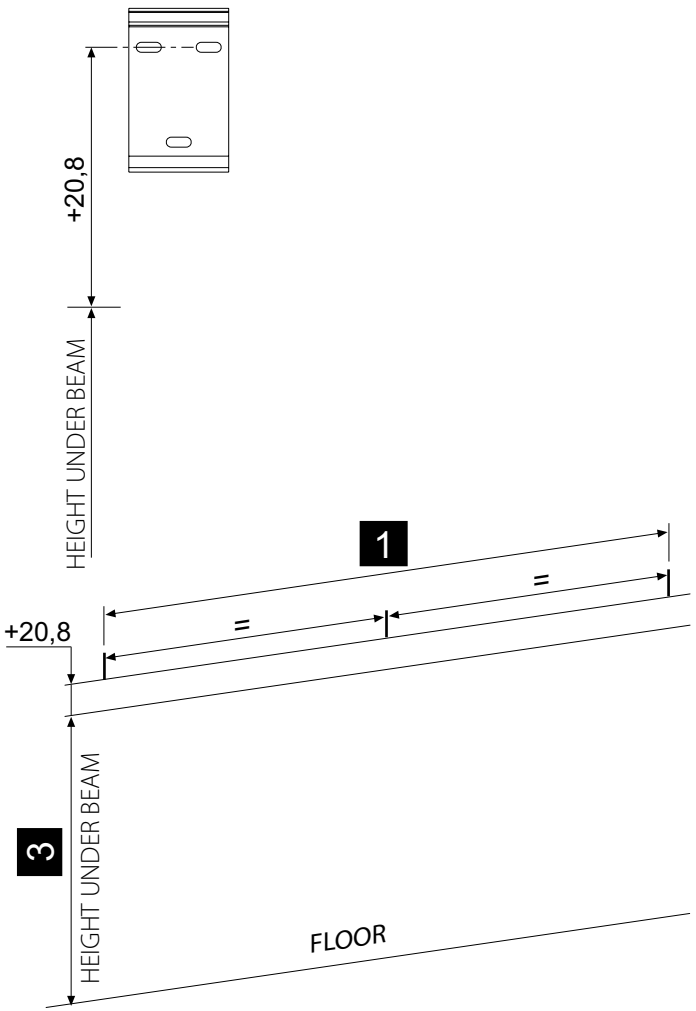

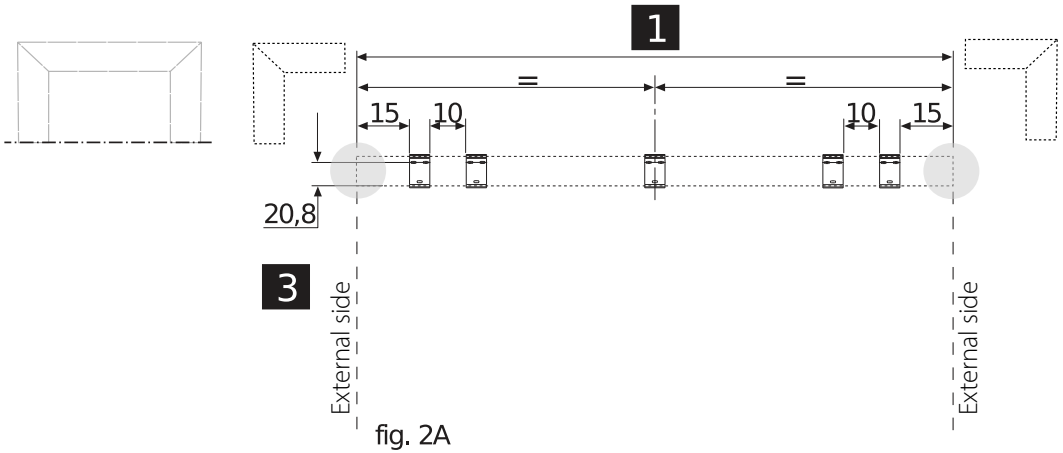

fig. 2A

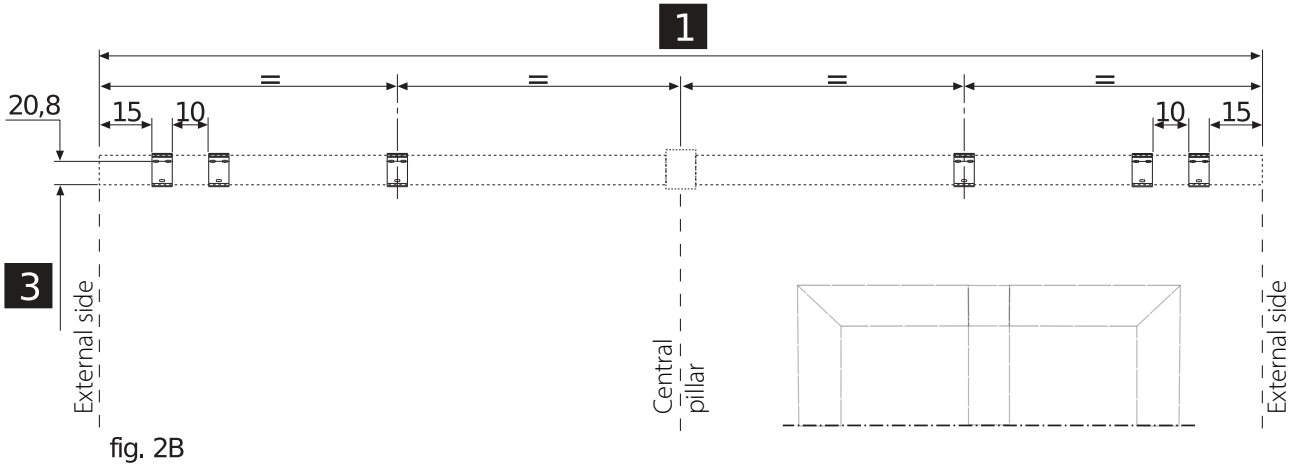

fig. 2B

fig. 1 - Trace on the wall

- the slot fixing line at the height indicated in the project drawing (**3**) + 20.8 cm;
- the external line of the total width (**1**);
- in case of side-by-side structures, trace the intermediate fixing measures of the central brackets.

fig. 2A

- Plate-to-wall fixing drawing for single module.

fig. 2B

- Plate-to-wall fixing drawing for side-by-side module.

1 WALL INSTALLATION

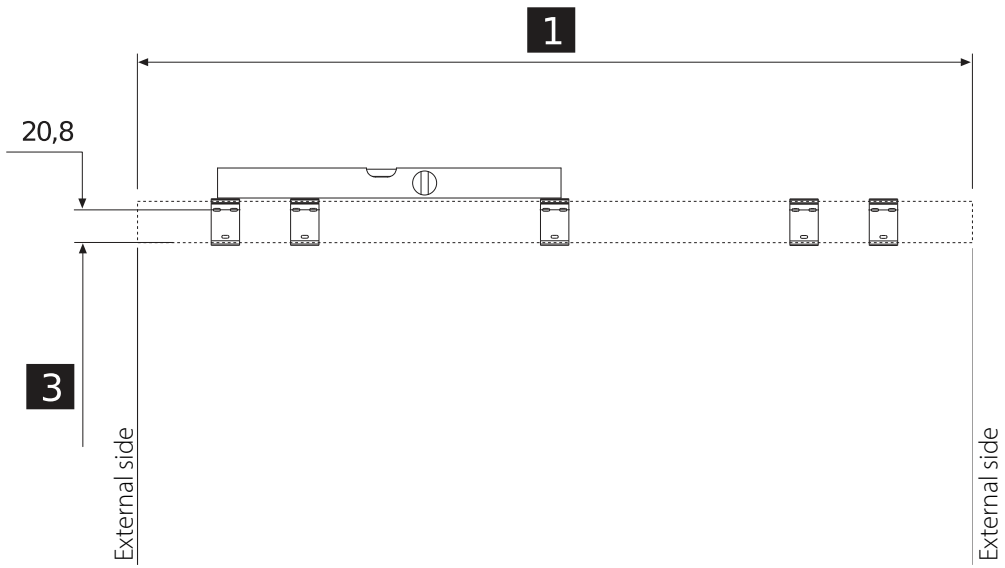

Fig. 3

- Use a water level to check the linearity of the drawn traces.

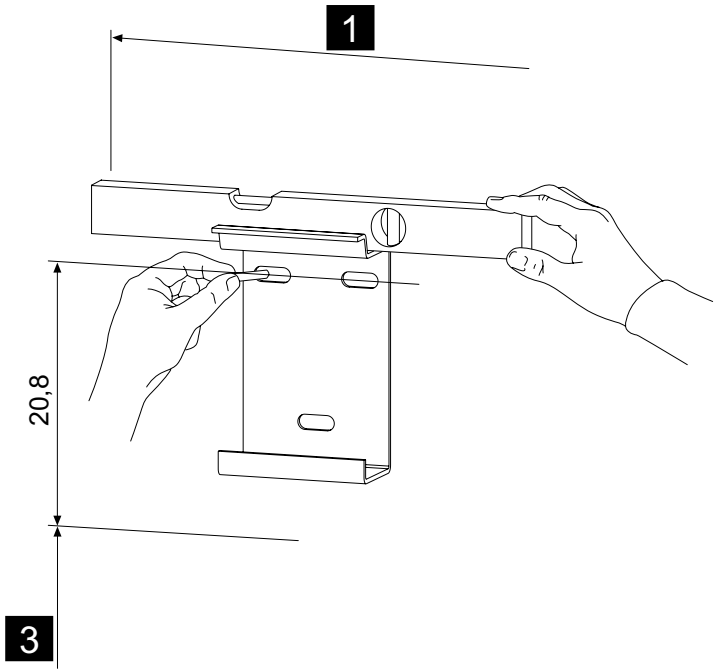

Fig. 4

- Position the brackets on the line on the wall and mark the fixing holes.

1 WALL INSTALLATION

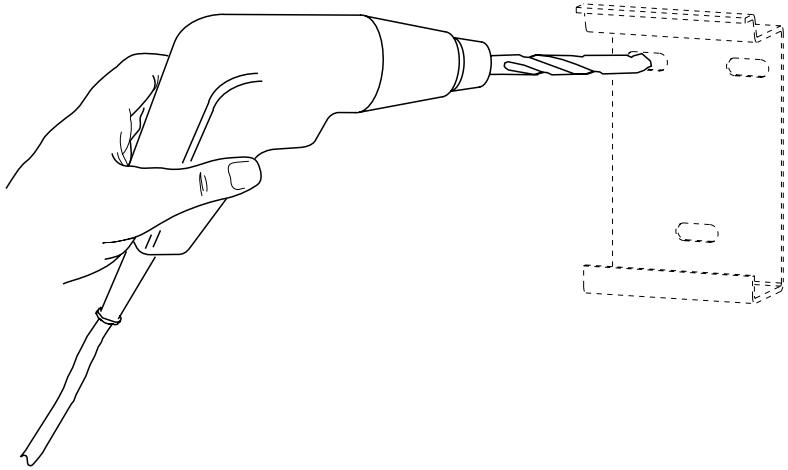

Fig. 5
- Drill the fixing holes of the brackets on the wall using a suitable bit.

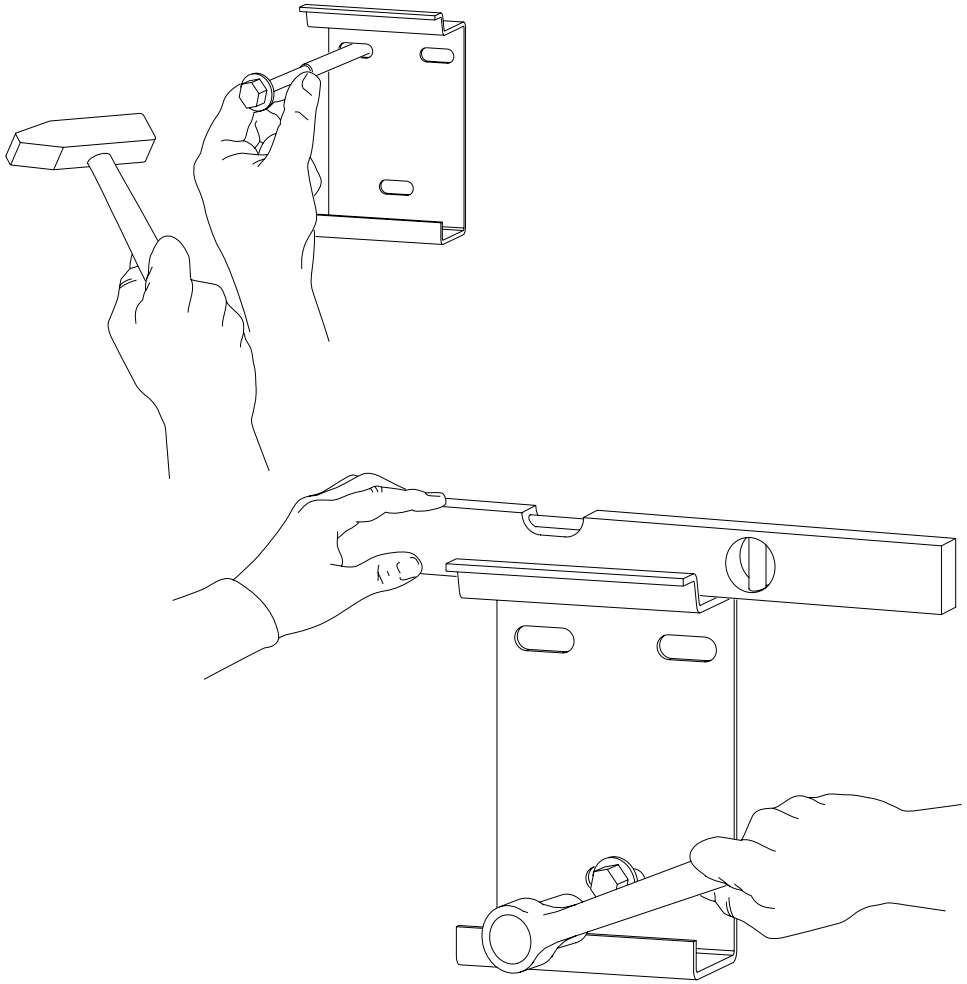

Fig. 6
- Insert the dowels (suitable to the wall and the loads), (see table on page 55);
- tighten the screws;
- check the planarity of every single bracket.

1 WALL INSTALLATION

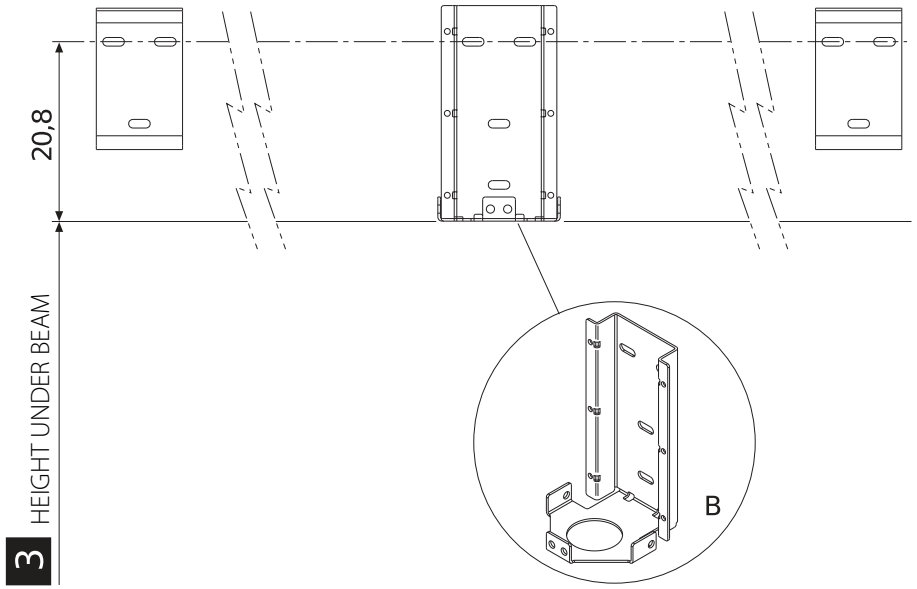

Fig. 7

- Bracket fixing to wall for central pillar;
- if the project indicates a side-by-side module, use the bracket (**B**) as central component by fixing it to the wall following the operations described before.

NOTE: in case of side pillar, the wall-mounted bracket is not present.

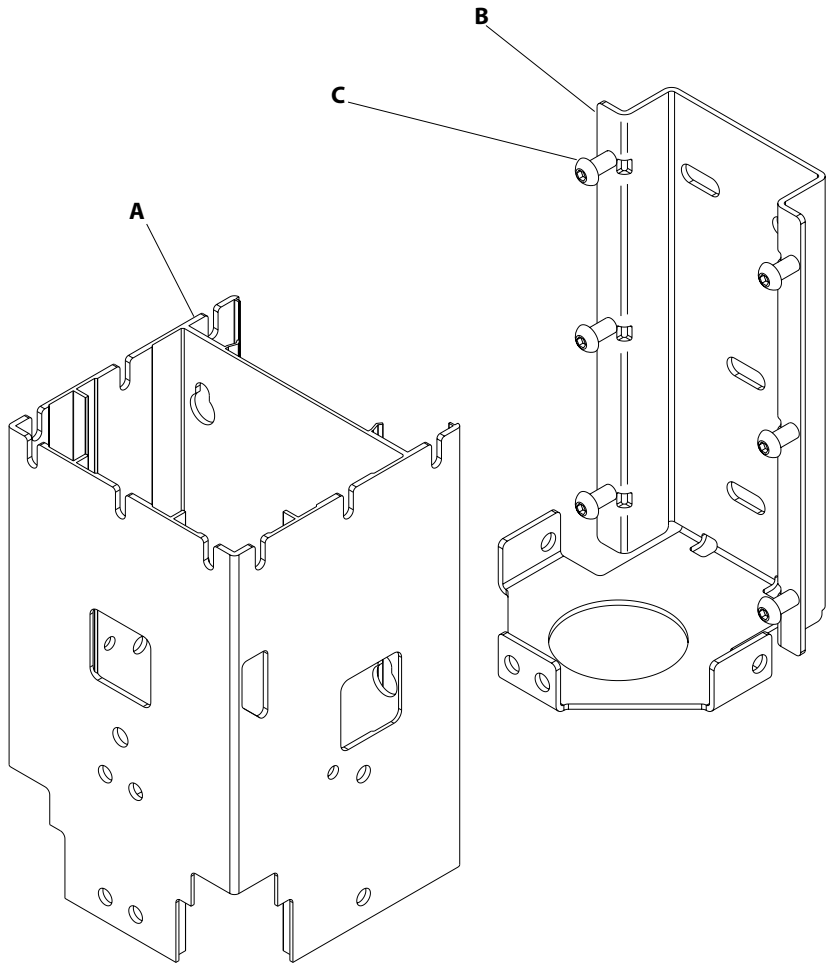

Fig. 8

- Bracket fixing to wall for central pillar;
- fix the central pillar for wall installation (**A**) to plate (**B**) using 6 M8x16 screws (**C**).

2 PILLAR INSTALLATION

IMPORTANT: the 4 pillars must be positioned so as to obtain a "PERFECTLY" flat structure; this is fundamental to ensure that rainwater correctly flows inside the pillars and does not spill over the gutters.

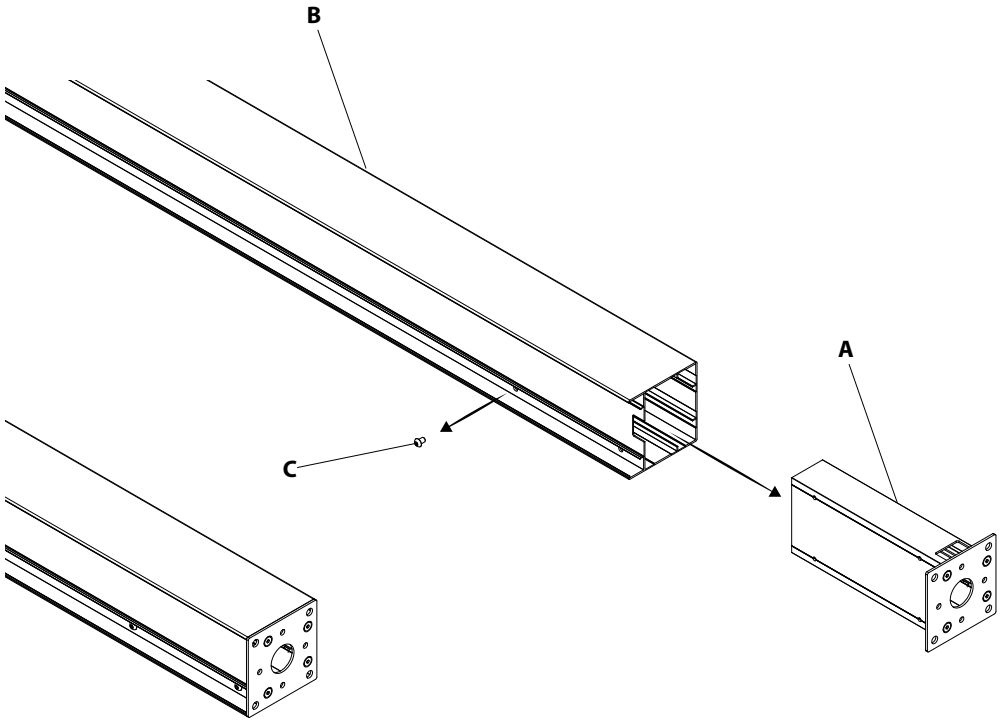

Fig. 9

- Loosen the M8x16 BUTTON screw (**C**) and remove foot (**A**) from the pillar (**B**).
- The other 3 screws required for the next fixing operation are in the accessories box.

Note: perform this operation on all pillars of the structure.

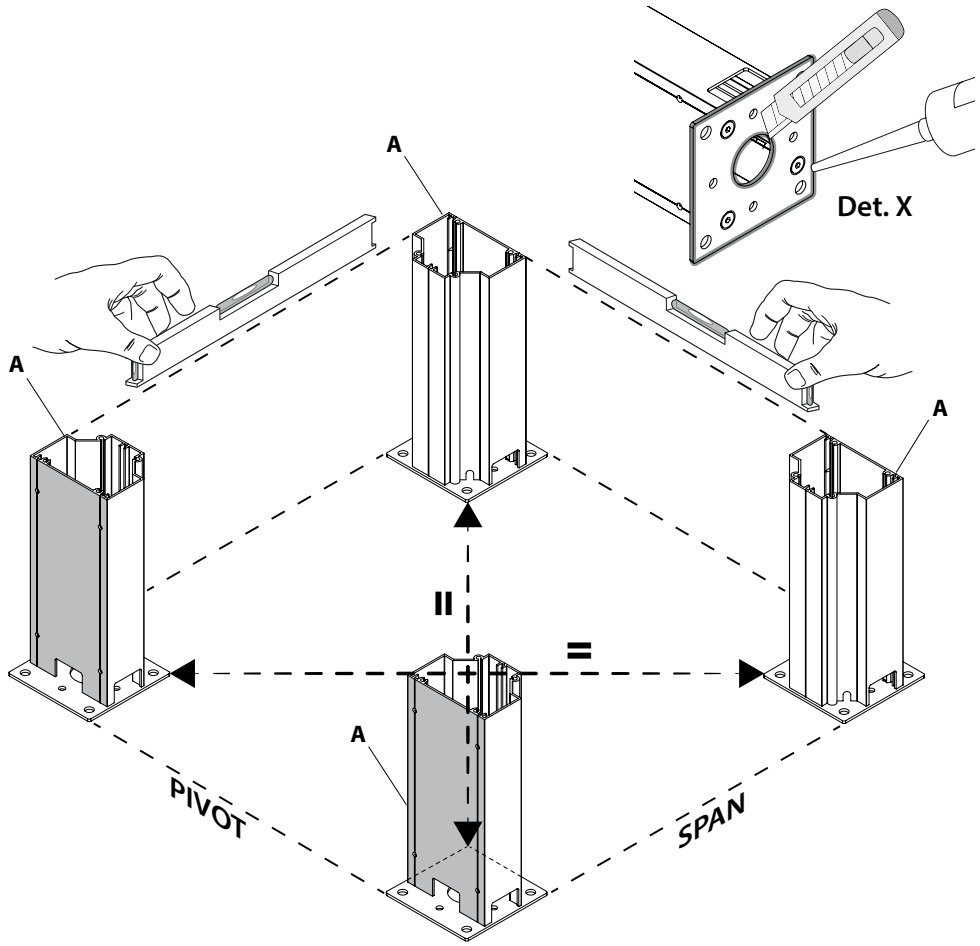

Fig. 10

- Orient the pillar feet (**A**) correctly and fix them to the ground using suitable dowels. In doing this, respect the parallelism and diagonals referring to the 4 holes at the corners of the ground plate.

ATTENTION TO THE INSTALLATION: The foot sides with the holes for the pillar retaining screws are those of side (PROJECTION). In case of floor water drain, before fastening to the ground, trim the punched sticker with a cutter in the area of the drain hole and apply a bead of silicone in the hole as shown in (Det. X).

2 PILLAR INSTALLATION

SELF-SUPPORTING VERSION WITH SUPPLEMENTARY MODULE ON SPAN SIDE
Important: the pillars must be positioned so as to obtain a "PERFECTLY" flat structure; this is fundamental to ensure that rainwater correctly flows inside the pillars and does not spill over the gutters.

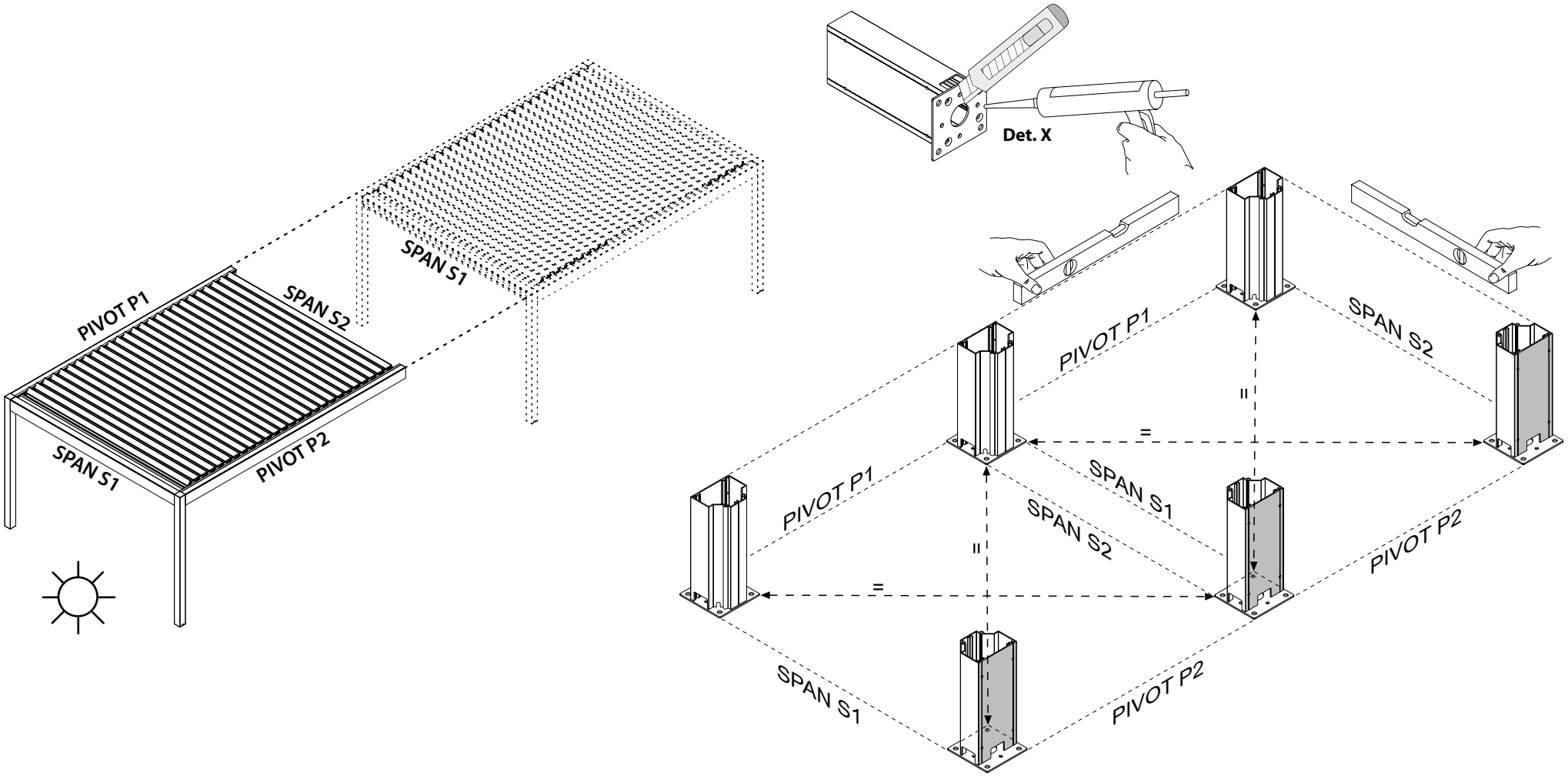

Fig. 11

- Orient the pillar feet **(A)** correctly and fix them to the ground using dowels suitable to the floor. In doing this, respect the parallelism and diagonals measures referring to the 4 holes at the corners of the ground plate.

ATTENTION TO THE INSTALLATION: The foot sides with the holes for the pillar retaining screws are those of side (PROJECTION). In case of floor water drain, before fastening to the ground, trim the punched sticker with a cutter in the area of the drain hole and apply a bead of silicone in the hole as shown in (Det. X).

2 PILLAR INSTALLATION

SELF-SUPPORTING VERSION WITH SUPPLEMENTARY MODULE ON PIVOT SIDE

Important: the pillars must be positioned so as to obtain a "PERFECTLY" flat structure; this is fundamental to ensure that rainwater correctly flows inside the pillars and does not spill over the gutters.

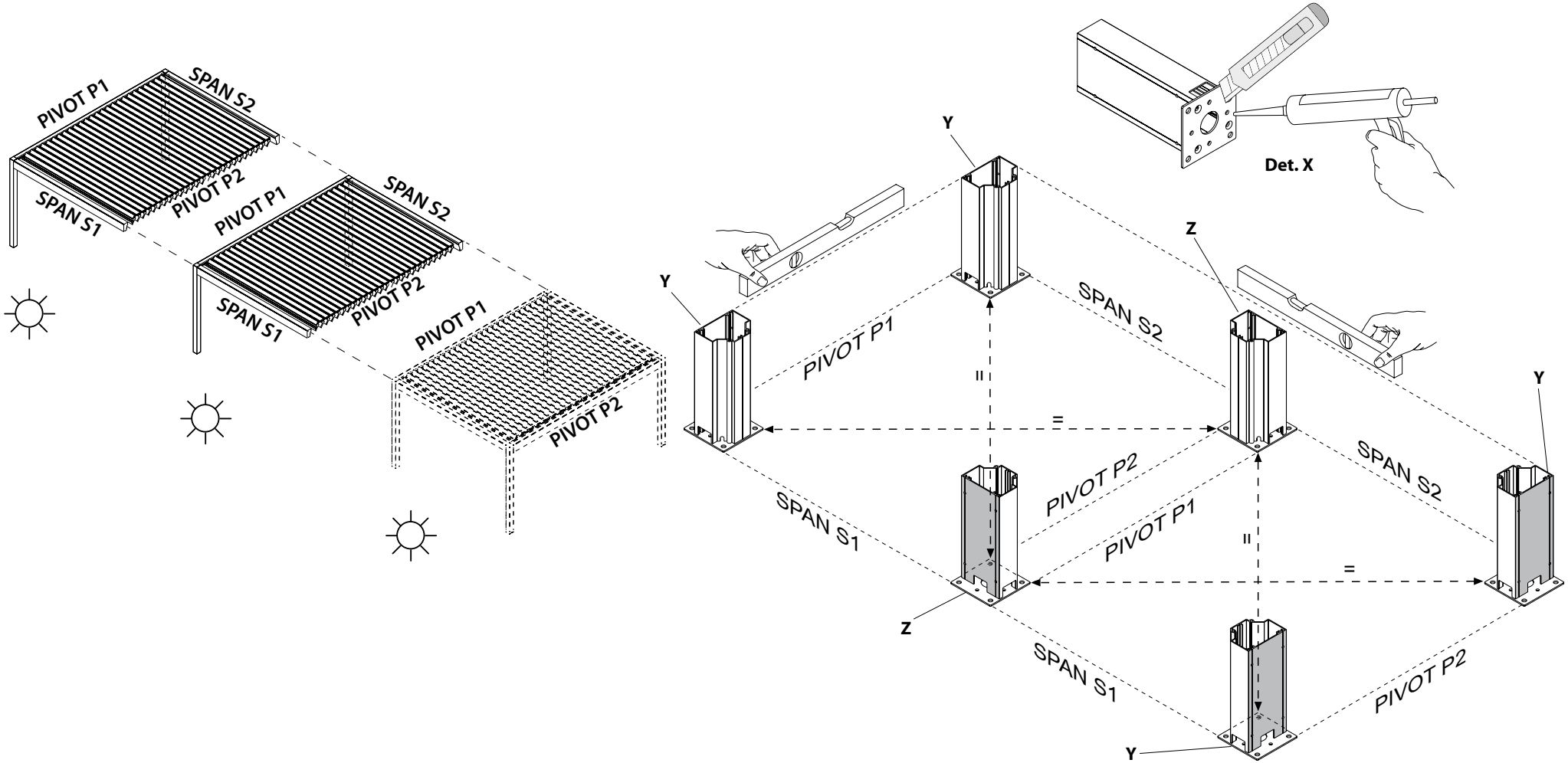

Fig. 12

- Orient the pillar feet **(A)** correctly and fix them to the ground using dowels suitable to the floor. In doing this, respect the parallelism and diagonals measures referring to the 4 holes at the corners of the ground plate.

ATTENTION TO THE INSTALLATION: for the side pillars, the foot sides with the screw fixing holes of the pillar are those of the PROJECTION side (Y), whereas for the common central pillars the foot sides with the holes for the pillar fixing screws are those of the WIDTH side (Z). In case of floor water drain, before fastening to the ground, trim the punched sticker with a cutter in the area of the drain hole and apply a bead of silicone in the hole as shown in (Det. X).

2 PILLAR INSTALLATION

IMPORTANT: the 4 pillars must be positioned so as to obtain a "PERFECTLY" flat structure; this is fundamental to ensure that rainwater correctly flows inside the pillars and does not spill over the gutters.

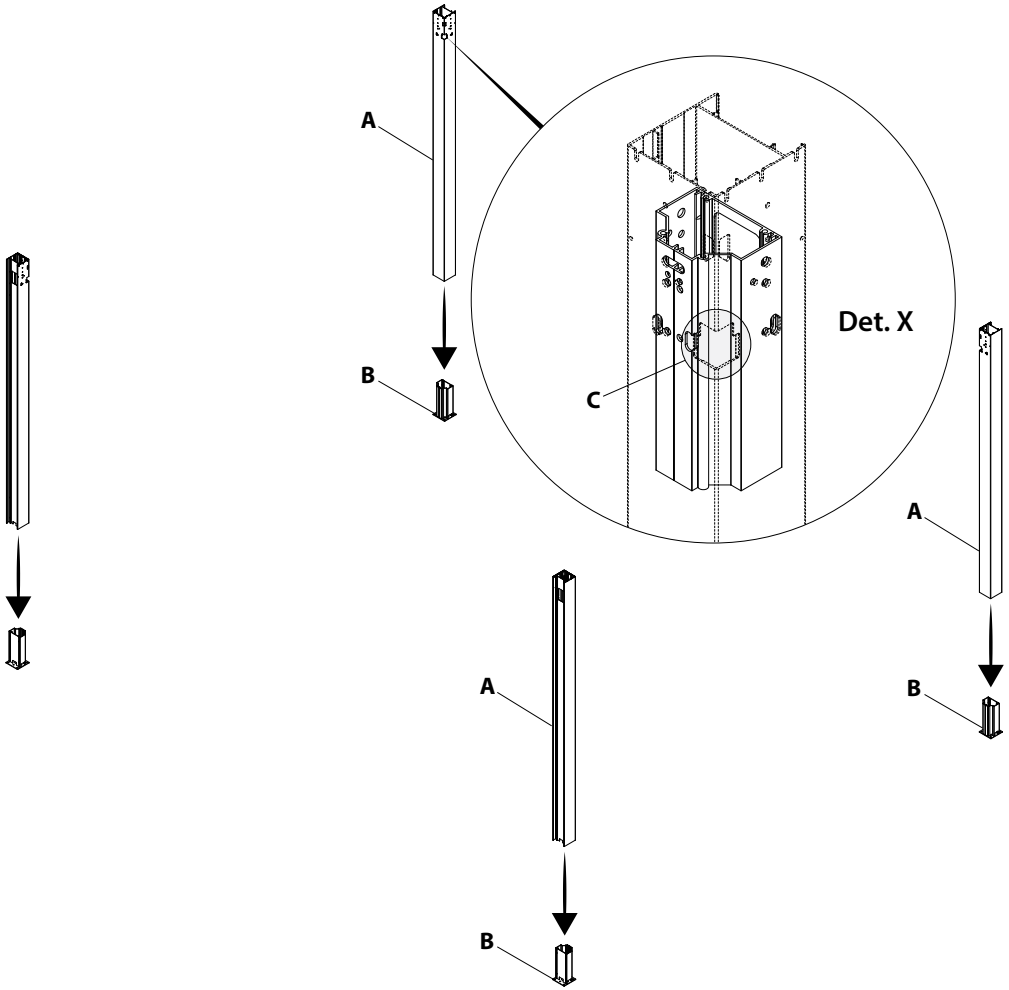

Fig. 13

- Insert pillars (**A**) into feet (**B**).

Note: The pillars feature reinforcements on the upper side.

Note: The recesses (C) on the top edge of the pillar (that will act as drain holes for the gutters) must be positioned inside the structure (det. X).

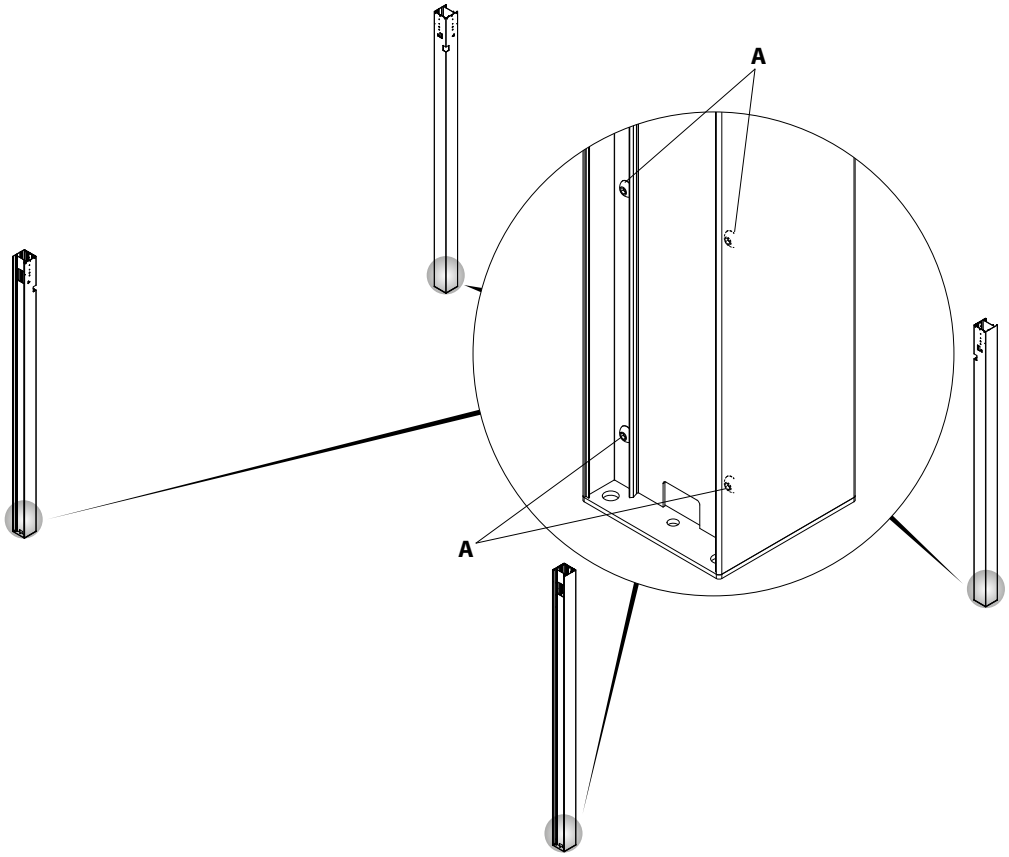

Fig. 14

Fix the pillars to the feet using M8x16 BUTTON screws (**A**) (q.ty 4 each).

Note: Should it not be possible to reach the screws because the pillar is against a wall, after the structure installation it is COMPULSORY to use the wall-mounting system on the upper beam.

2 PILLAR INSTALLATION

SELF-SUPPORTING VERSION WITH SUPPLEMENTARY MODULE ON SPAN SIDE

SELF-SUPPORTING VERSION WITH SUPPLEMENTARY MODULE ON PIVOT SIDE

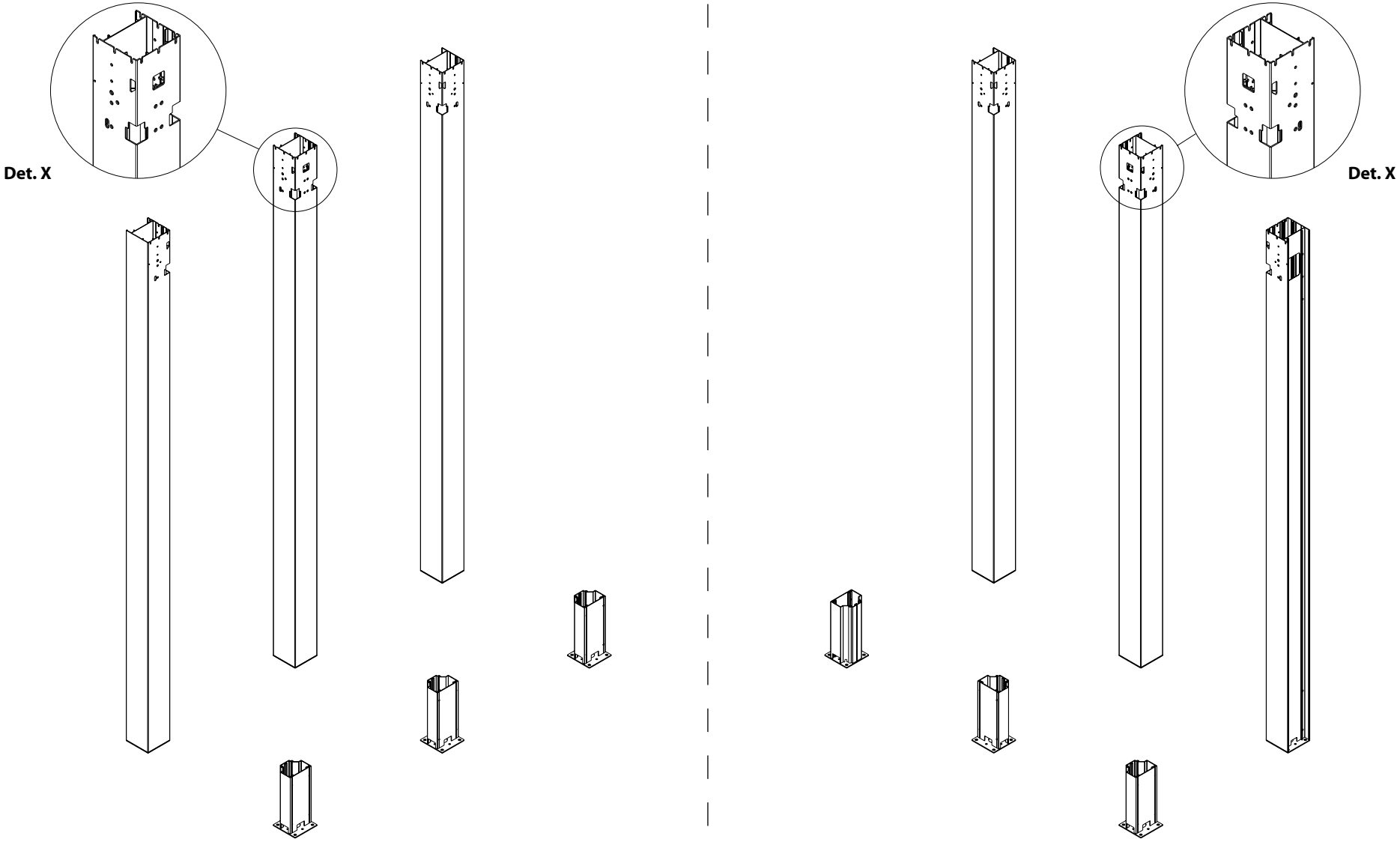

Fig. 15

- Repeat the operations described in figures 13 and 14 following the installation drawings described in this image (**det. X**).

WALL-MOUNTED VERSION

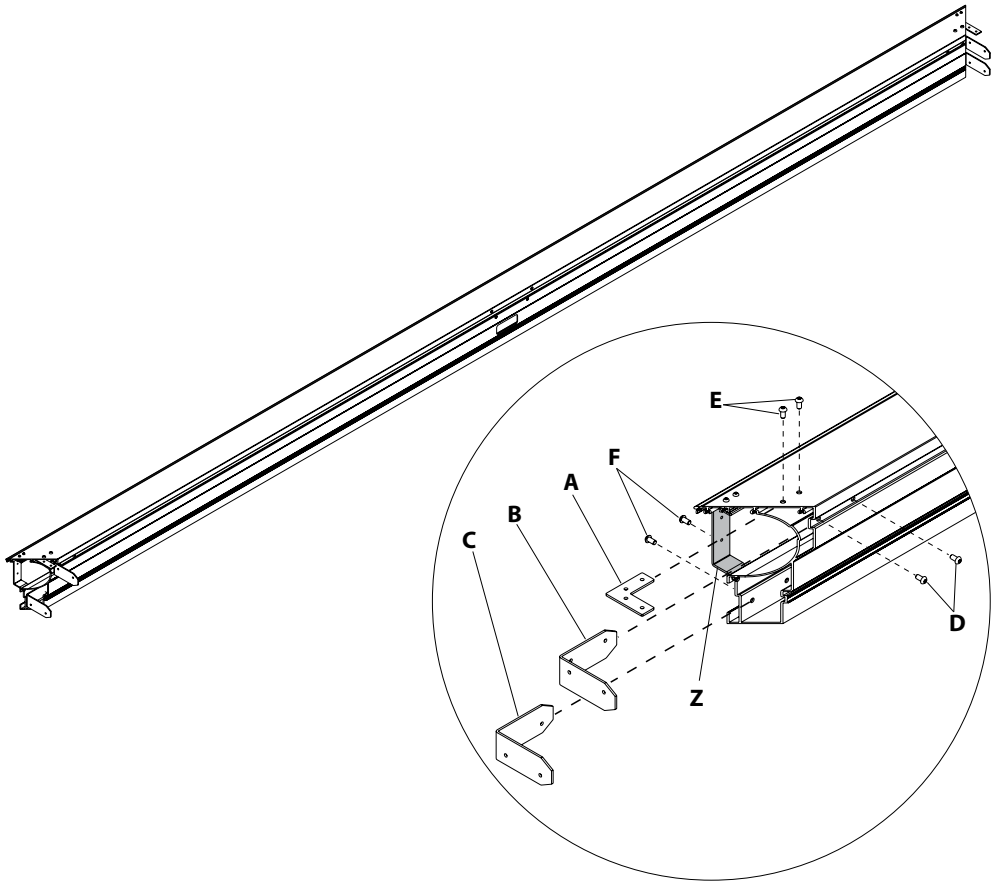

Fig. 16 - Wall-mounted beam assembly

- fix the plate (**A**) with the relevant M8x16 screws (**E**)
- fix the plate (**B**) with the relevant M8x16 screws (**D**)
- fix the plate (**C**) with the relevant M8x16 screws (**F**)
- repeat the same operations on the opposite side.

Note: the beams are already fitted with the brackets fixed by Corradi S.r.l. for a possible side closure (Z).

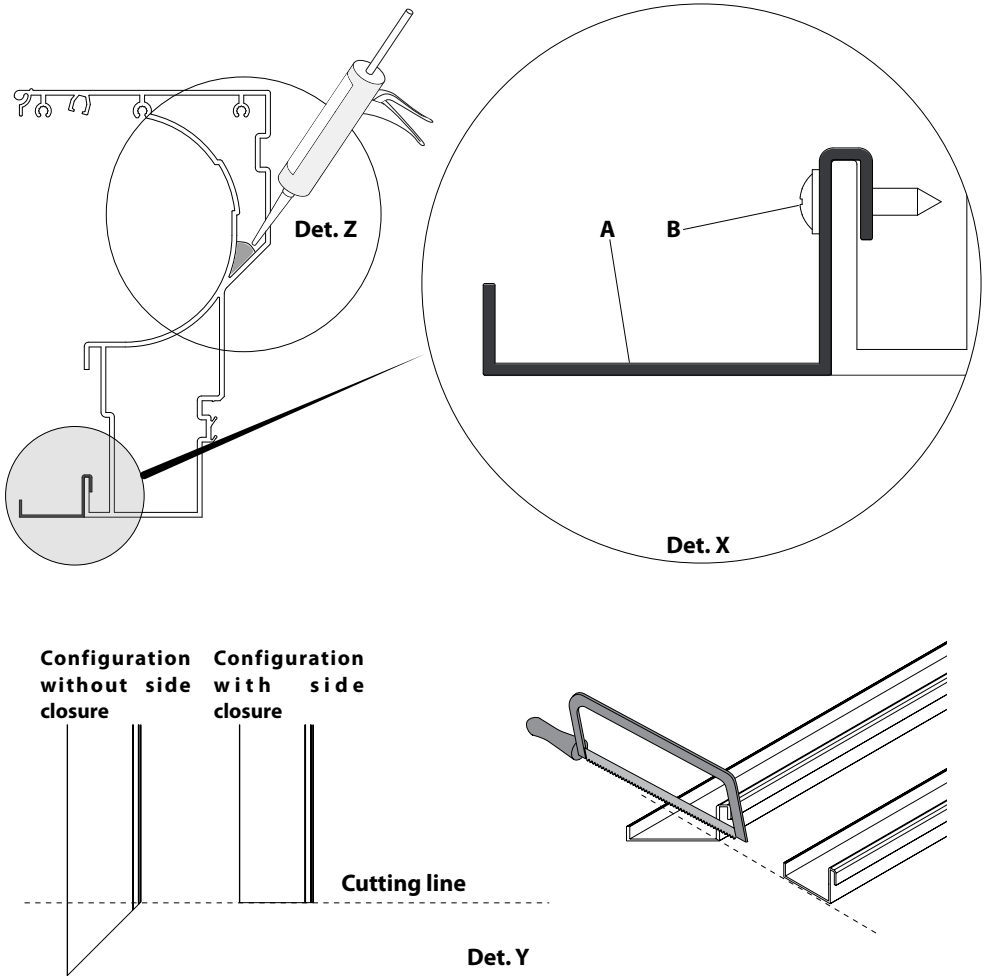

Fig. 17 - Wall-mounted beam assembly

Note: before installing the beams to the wall, install profile (A)

- Fix profile (**A**) with the suitable short self-drilling screws (**B**) at a distance of approximately 50 cm one from the other (**det. X**).
- On the ends of all beams spread a bead of silicone in the indicated points (**Det. Z**).

ATTENTION: If side closures are foreseen to be installed on the lateral sides it will be necessary to cut the profile as indicated in det. Y. Repeat the operation on the opposite side if the side closure is foreseen.

3 CROSSBEAM INSTALLATION

WALL-MOUNTED VERSION

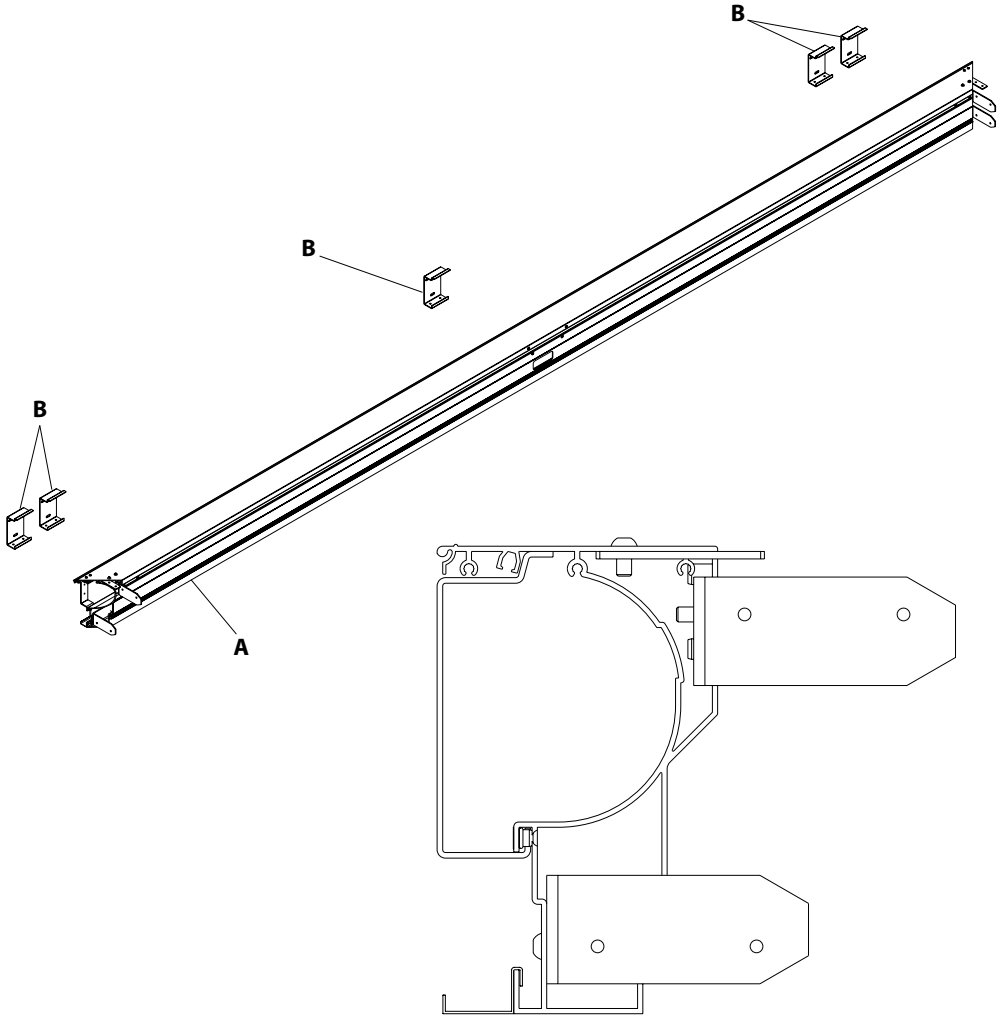

Fig. 18

- Lay the beam (**A**) on the brackets (**B**) fixed to the wall.

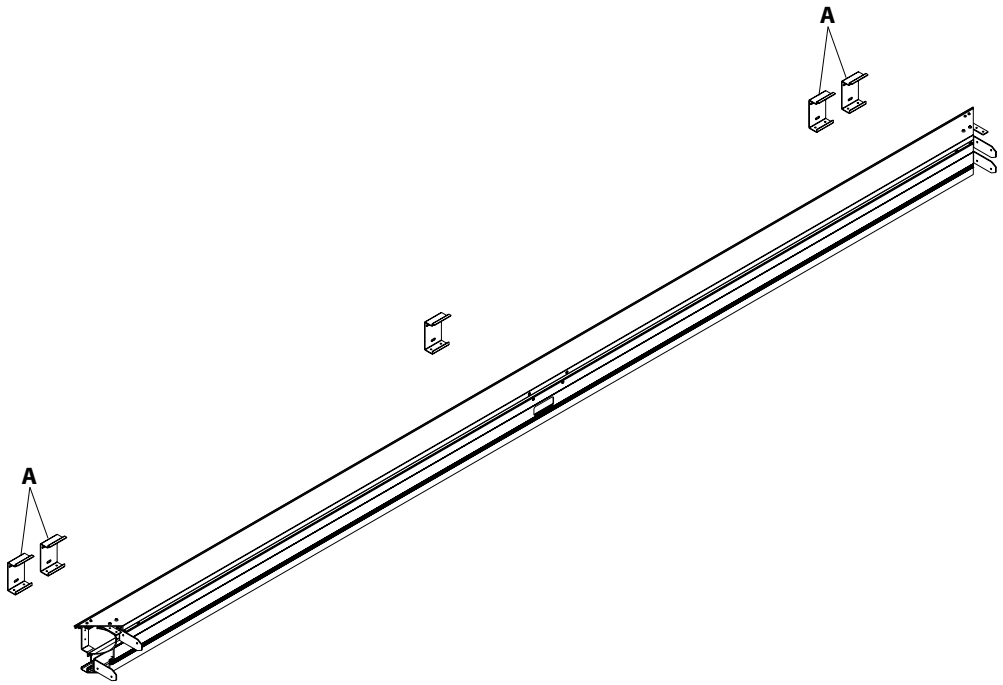

Fig. 19 - Anti-lifting bracket assembly

Note: the anti-lifting plate is foreseen to be fixed on the 4 side brackets (A).

3 CROSSBEAM INSTALLATION

WALL-MOUNTED VERSION

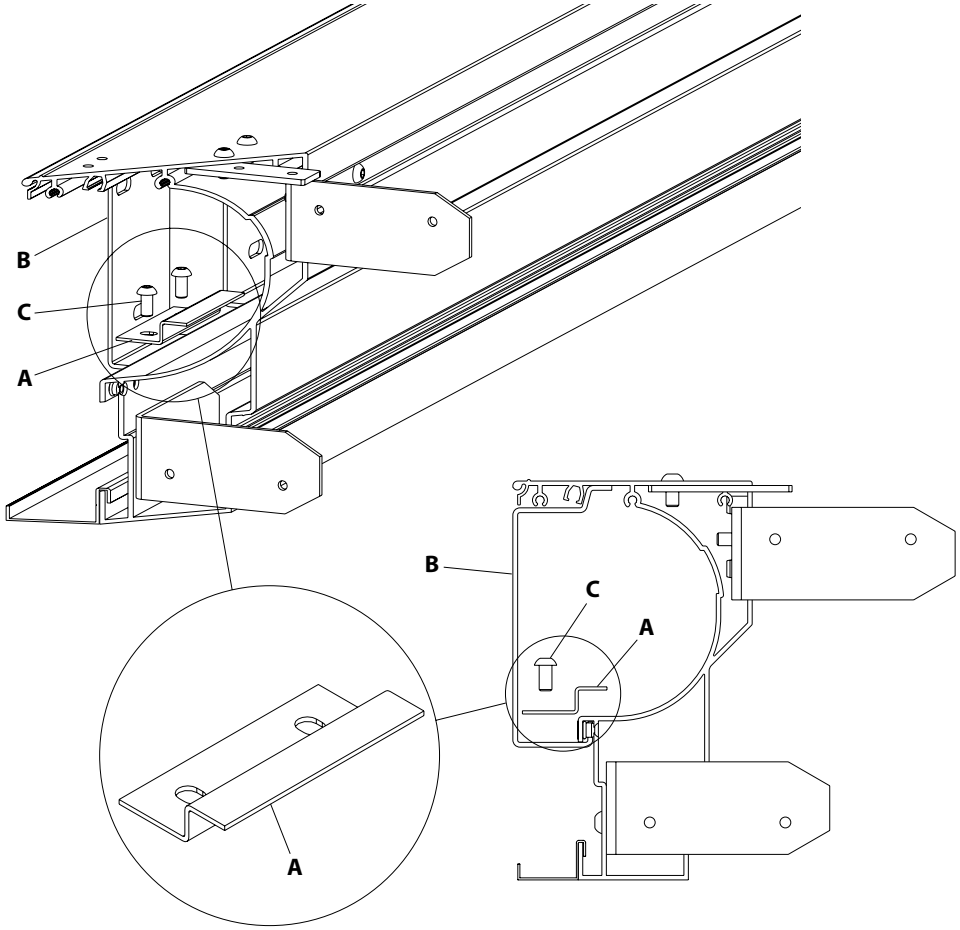

Fig. 20 - Anti-lifting bracket assembly

- Fix the plate (**A**) to the wall-mounted bracket (**B**) using the 2 supplied M8x16 screws (**C**).

WALL-MOUNTED VERSION

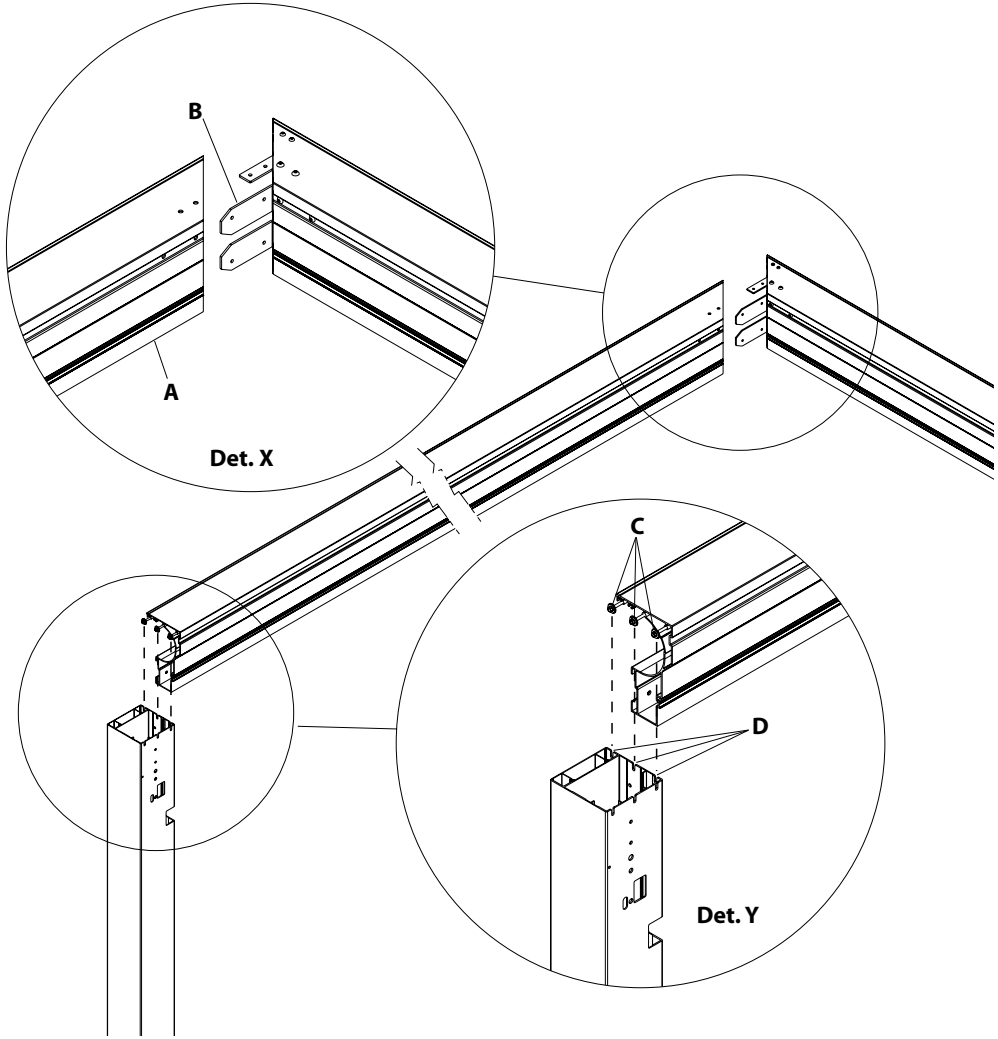

Fig. 21 - Side beam assembly

Note: before the installation, check that the pillars are positioned correctly (see page 12).

- Insert the side beam (**A**) in the rear brackets (**B**) and the screws (**C**) in the relevant slots (**D**), see **det. X-Y.**

3 CROSSBEAM INSTALLATION

WALL-MOUNTED VERSION

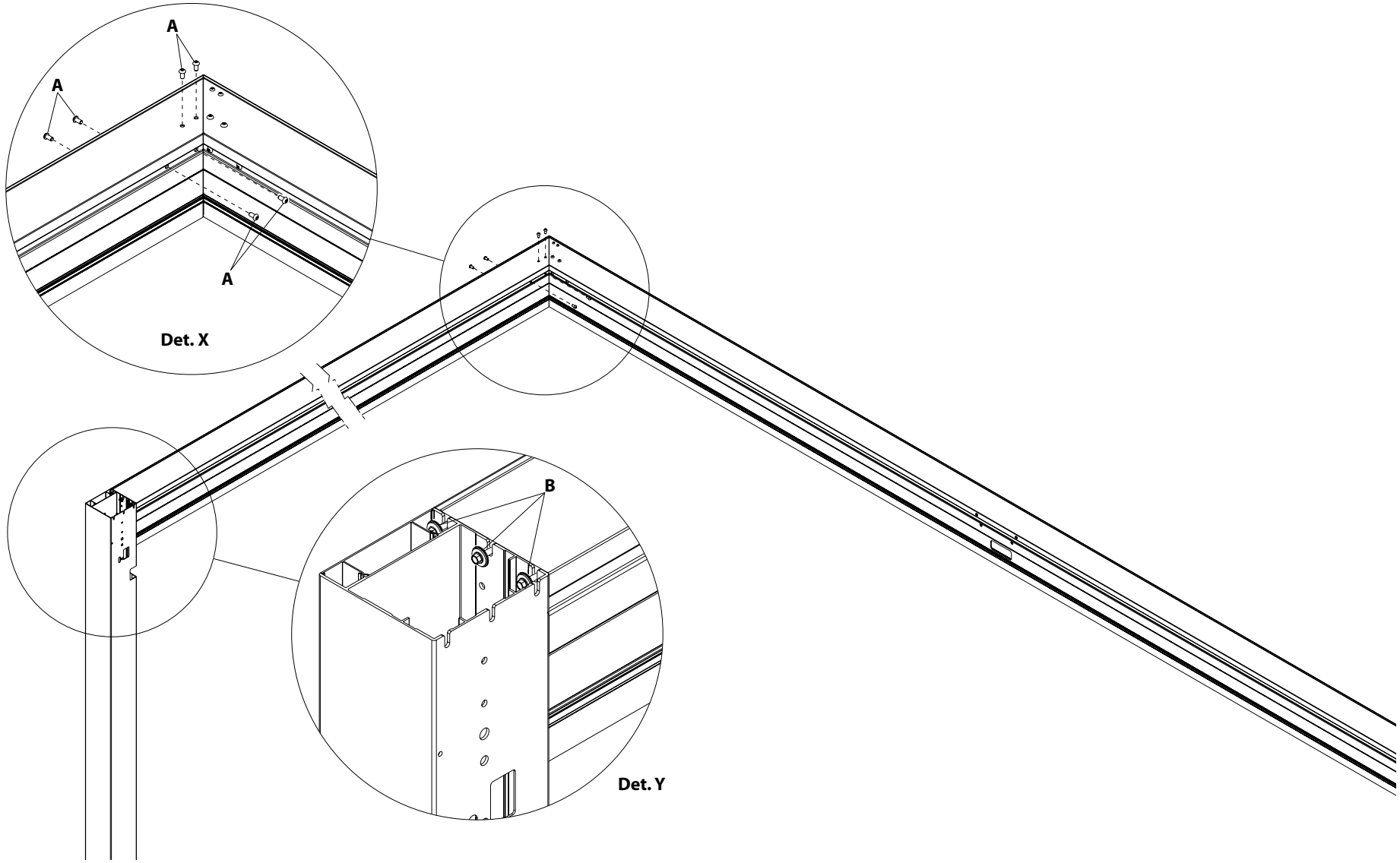

Fig. 22 - Side beam assembly

- Tighten the M8x16 screws (**A**) to the side beam (**det. X**);
- tighten, without forcing, the screws (**B**) to the pillar (**det. Y**);
- repeat the operations on the opposite side.

3 CROSSBEAM INSTALLATION

PIVOT SIDE

- Motor supporting beam

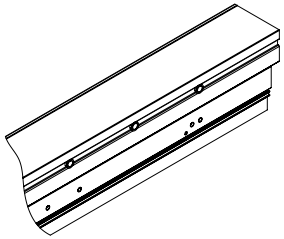

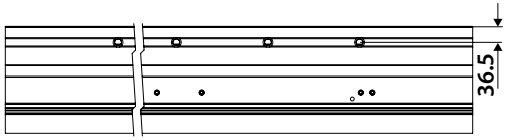

1

"Protection inside" beam configuration

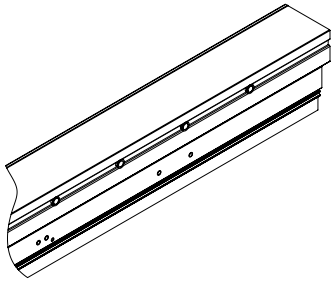

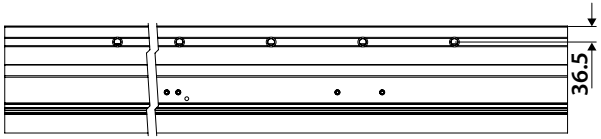

2

"Sun inside" beam configuration

- Idle side beam

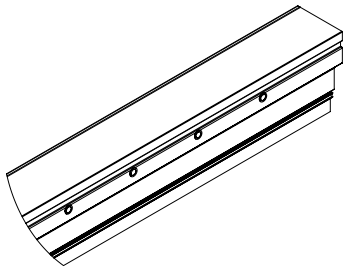

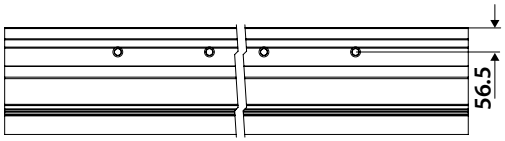

3

Front beam configuration (opposite to motor)

SPAN SIDE

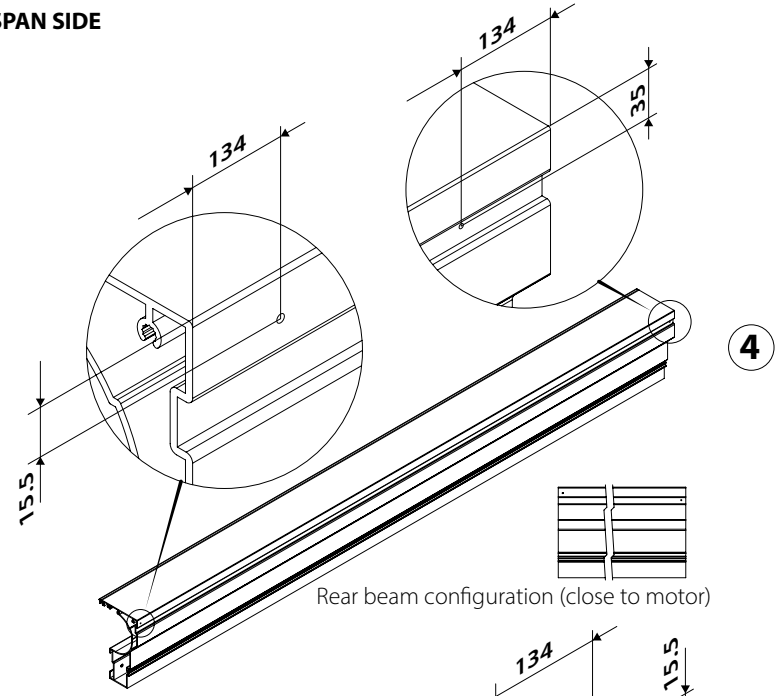

4

Rear beam configuration (close to motor)

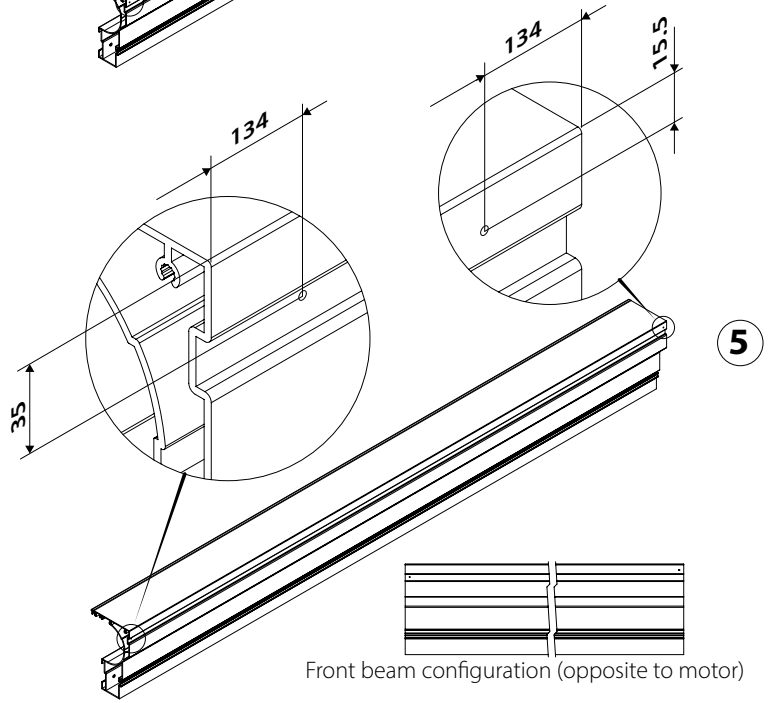

5

Front beam configuration (opposite to motor)

fig. 23 - Possible beam configurations

3 CROSSBEAM INSTALLATION

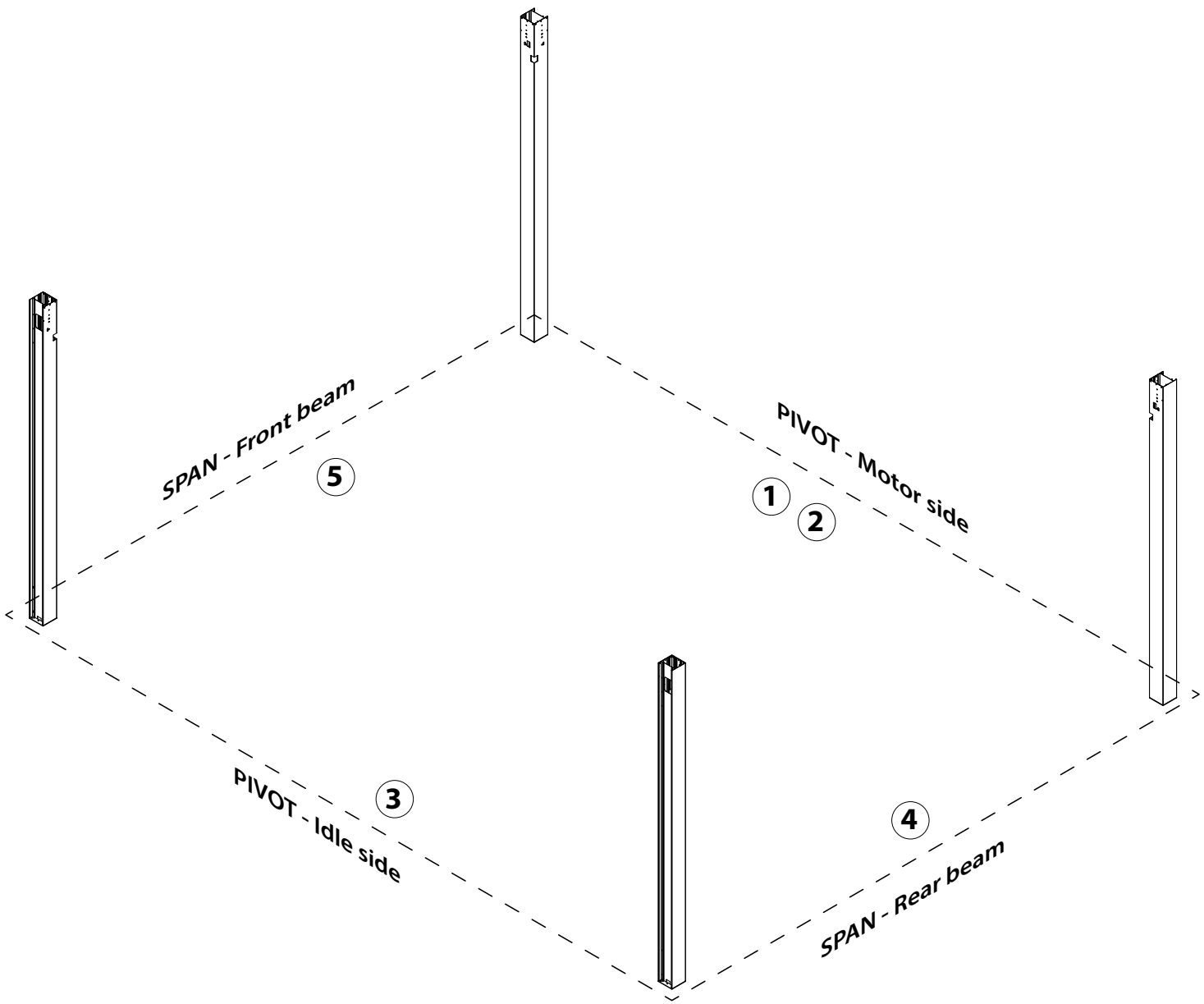

fig. 24 - Main diagram

SELF-SUPPORTING VERSION WITH SUPPLEMENTARY MODULE ON SPAN SIDE

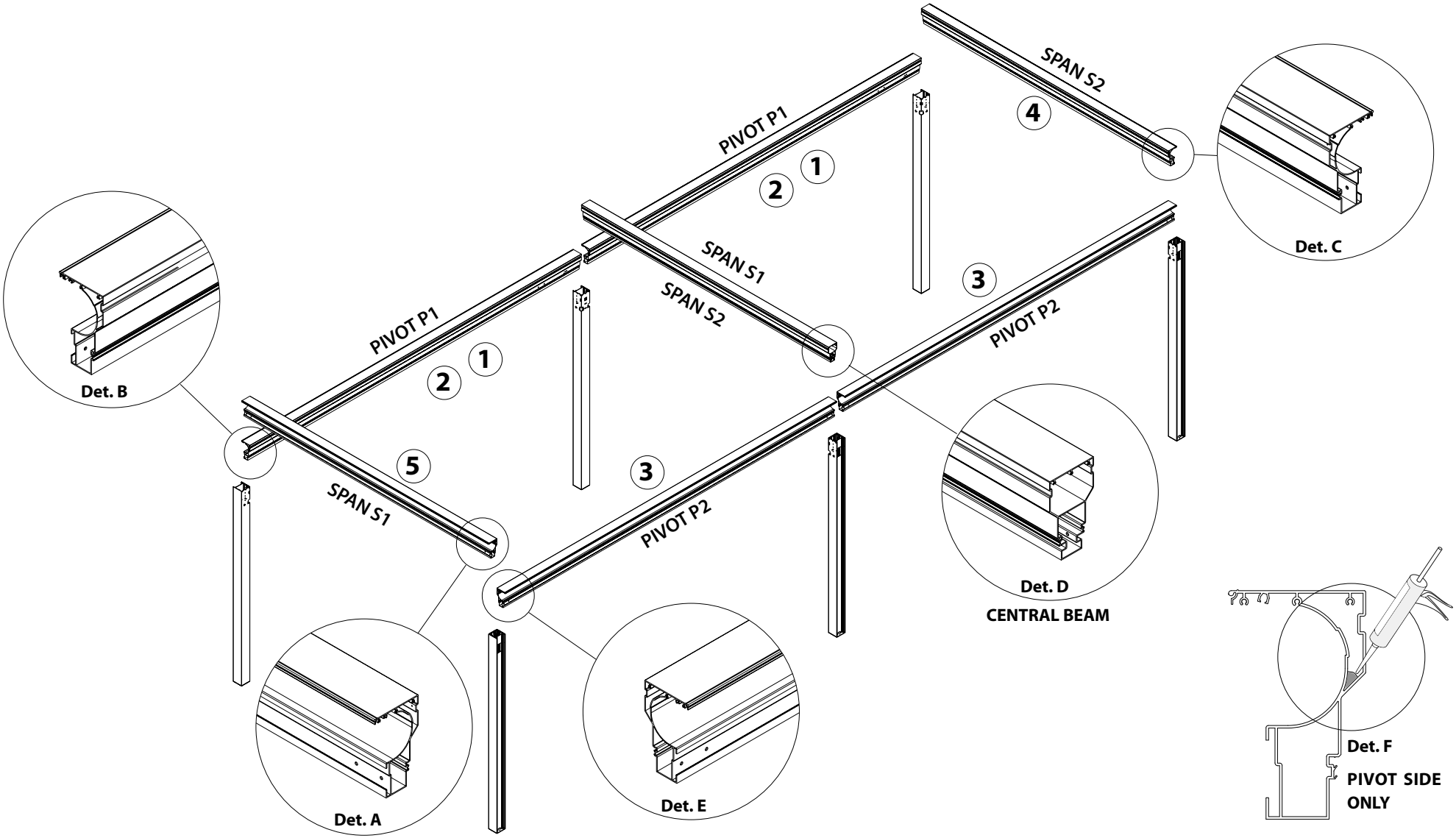

fig. 25 - Main diagram

On pivot side only, on the ends of all beams, spread a bead of silicone in the indicated points **(Det.F)**, near the pillar coupling.

3 CROSSBEAM INSTALLATION

SELF-SUPPORTING VERSION WITH SUPPLEMENTARY MODULE ON PIVOT SIDE

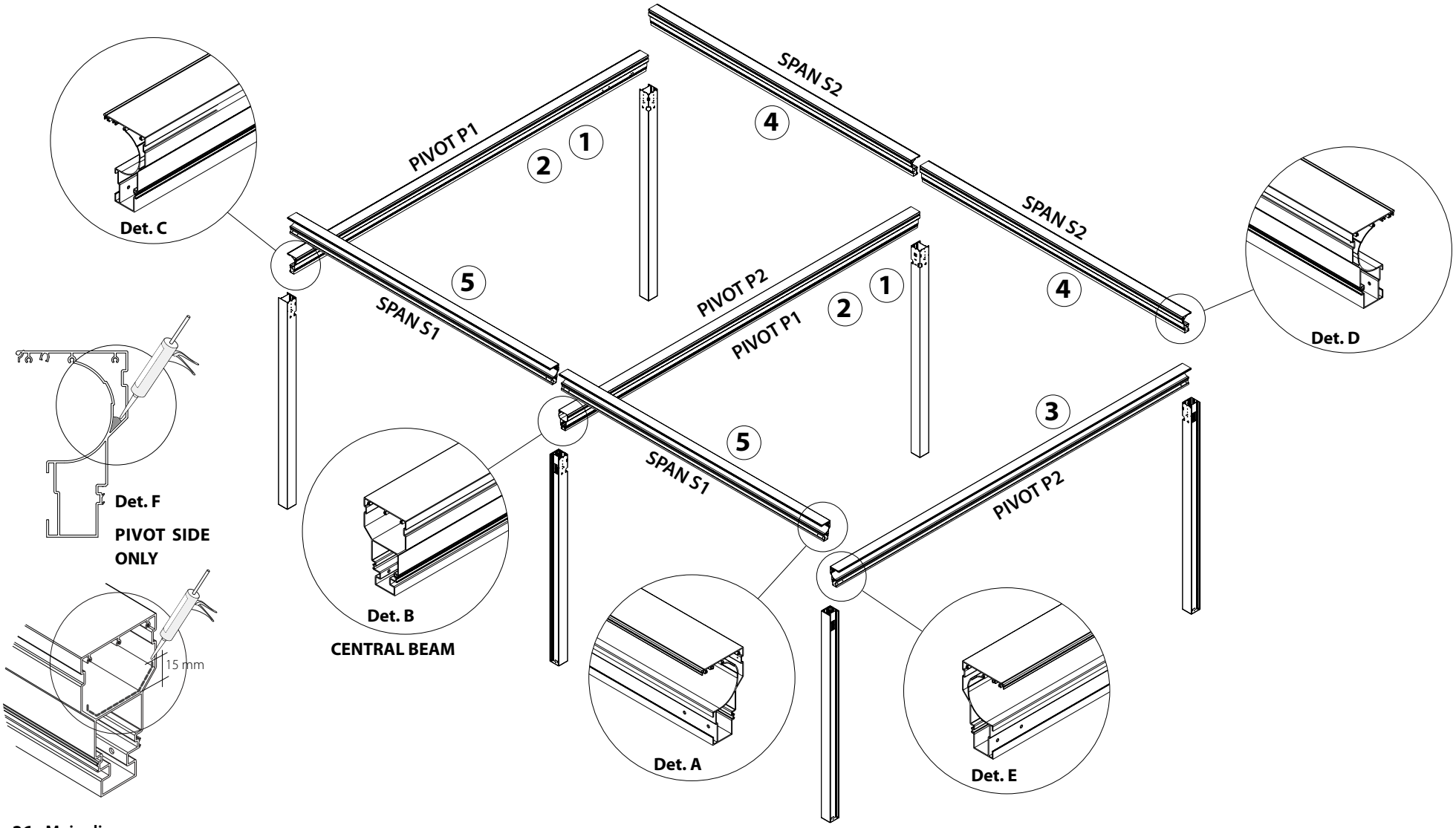

fig. 26 - Main diagram

On pivot side only, on the ends of all beams, spread a bead of silicone in the indicated points **(Det.F)**, near the pillar coupling.

3 CROSSBEAM INSTALLATION

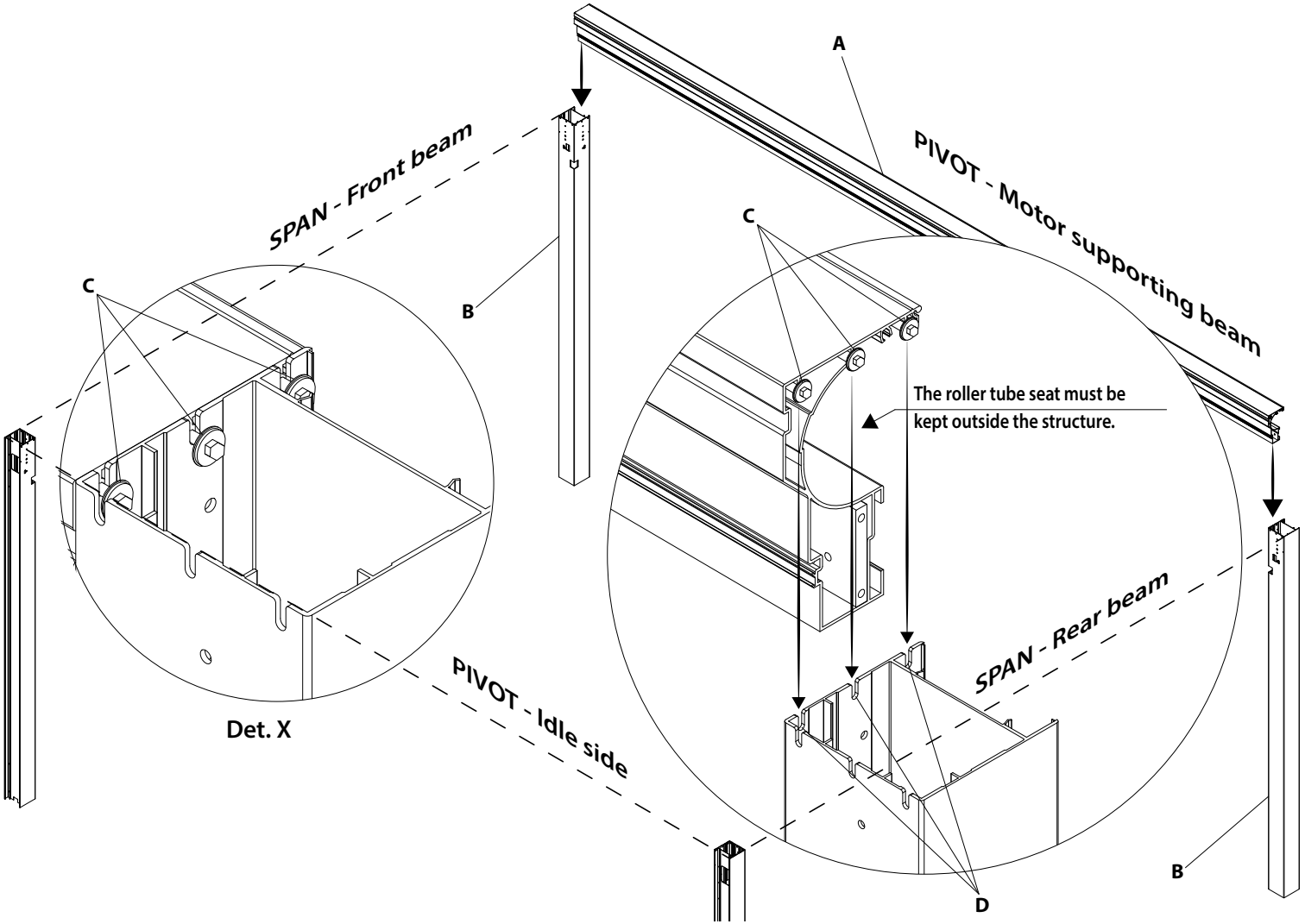

Fig. 27

- Insert the first crossbeam (**A**) into pillars (**B**) by inserting without tightening (**det. X)** the three screws (**C**) into the slotted seats (**D**).

Note: Use the same procedure also to assemble the other crossbeams, paying special attention to the passage of the electric cables shown on the next page.

Note: Take care not to invert the beams on SPAN and PIVOT sides during assembly.

3 CROSSBEAM INSTALLATION

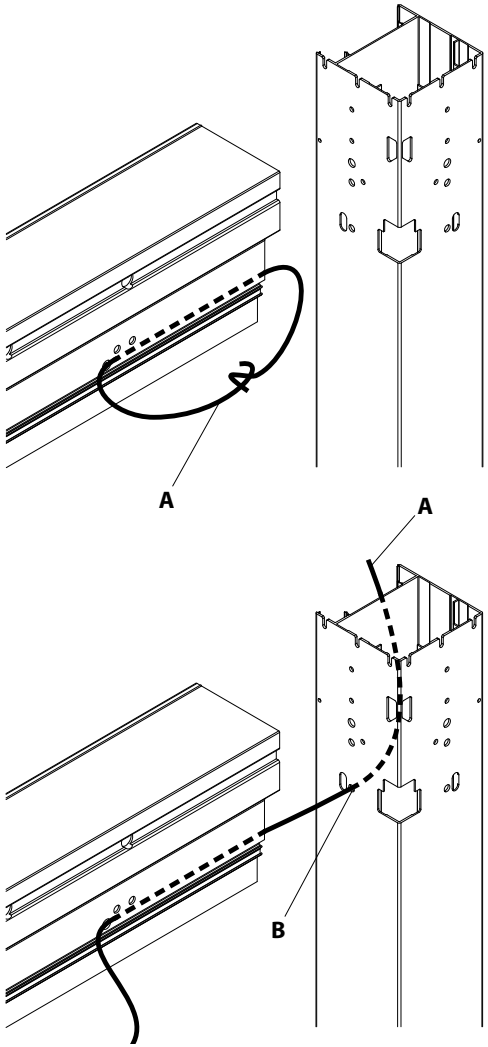

Fig. 28 - Motor power cable

- Loosen the knot to release the reference cable (**A**);
- insert cable end (**A**) inside hole (**B**).

Note: This cable will prove useful for motor assembly.

Note: We recommend this pillar to be the one with the power supply for the structure.

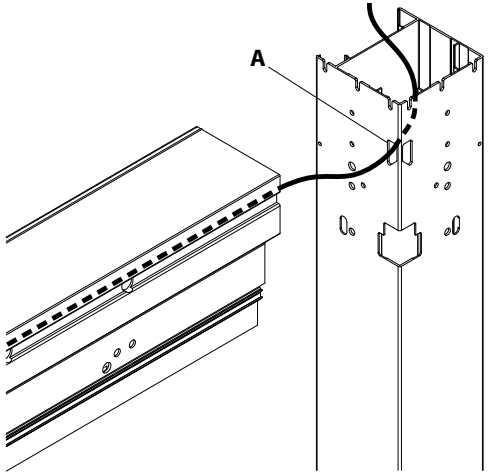

Fig. 29 - Light power cable inside blades

- Insert one or more cables, based on the number of light blades, inside slot (**A**).

Note: Maximum number of light blades: 3.

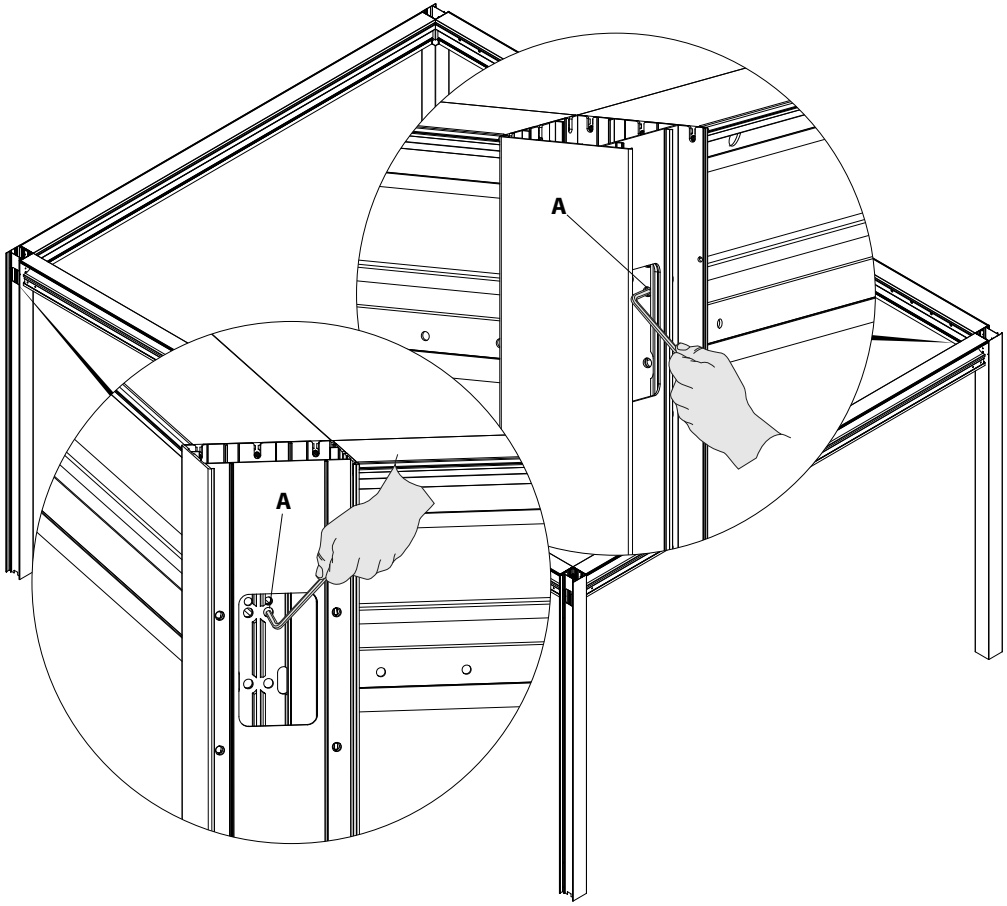

Fig. 30

- From the accessories box, take the 16 M8x16 BUTTON screws needed to fix the beam and the pillar. Insert the 4 screws (**A**) through the inspection hole on each pillar without fully tightening them (leave a few millimetres) to allow the following installation of the perimeter gutters.

4 GUTTER PROFILE INSTALLATION

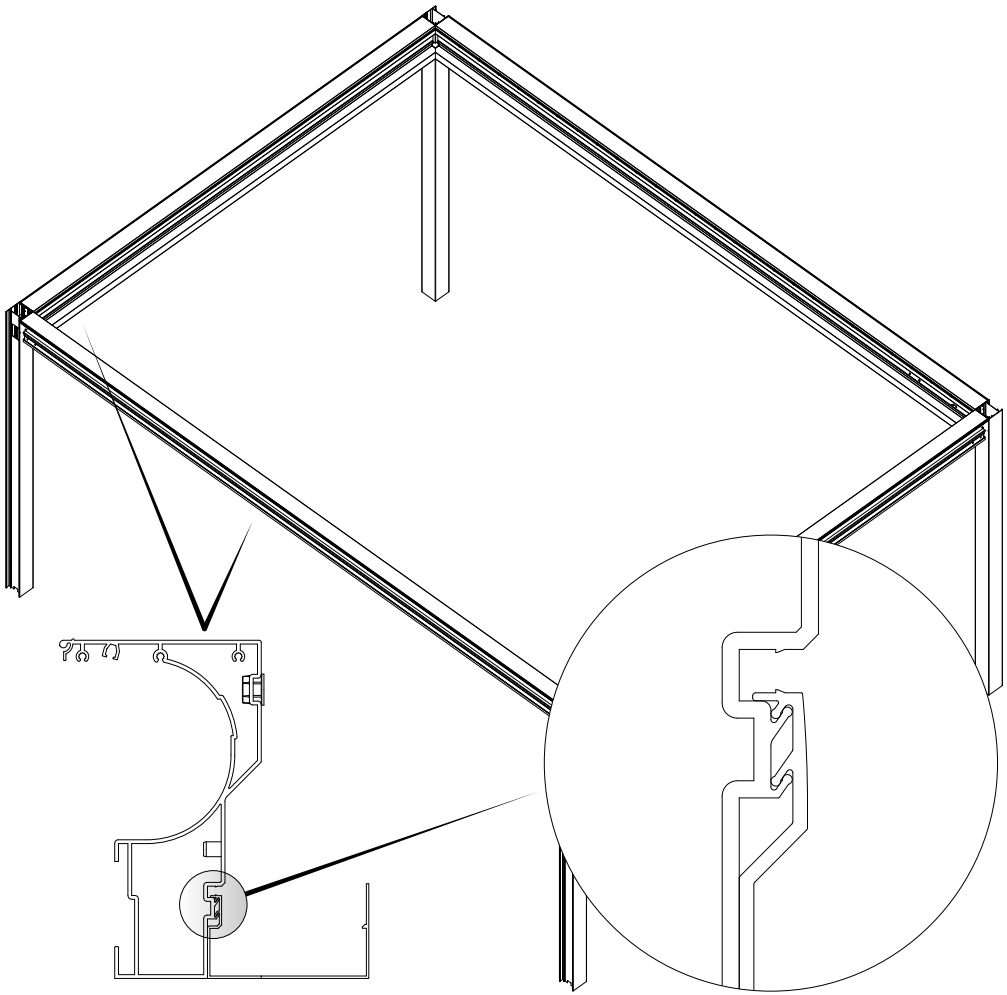

Fig. 31

- Fit the perimeter gutters one at a time (handling them with extreme care).

Note: the accessories box contains a bag with "small parts" of seal needed to temporarily fix (secure) each gutter profile.

NOTE: Before fitting gaskets, carefully close the end of the cavity (at the contact point with pillar) with a drop of silicone.

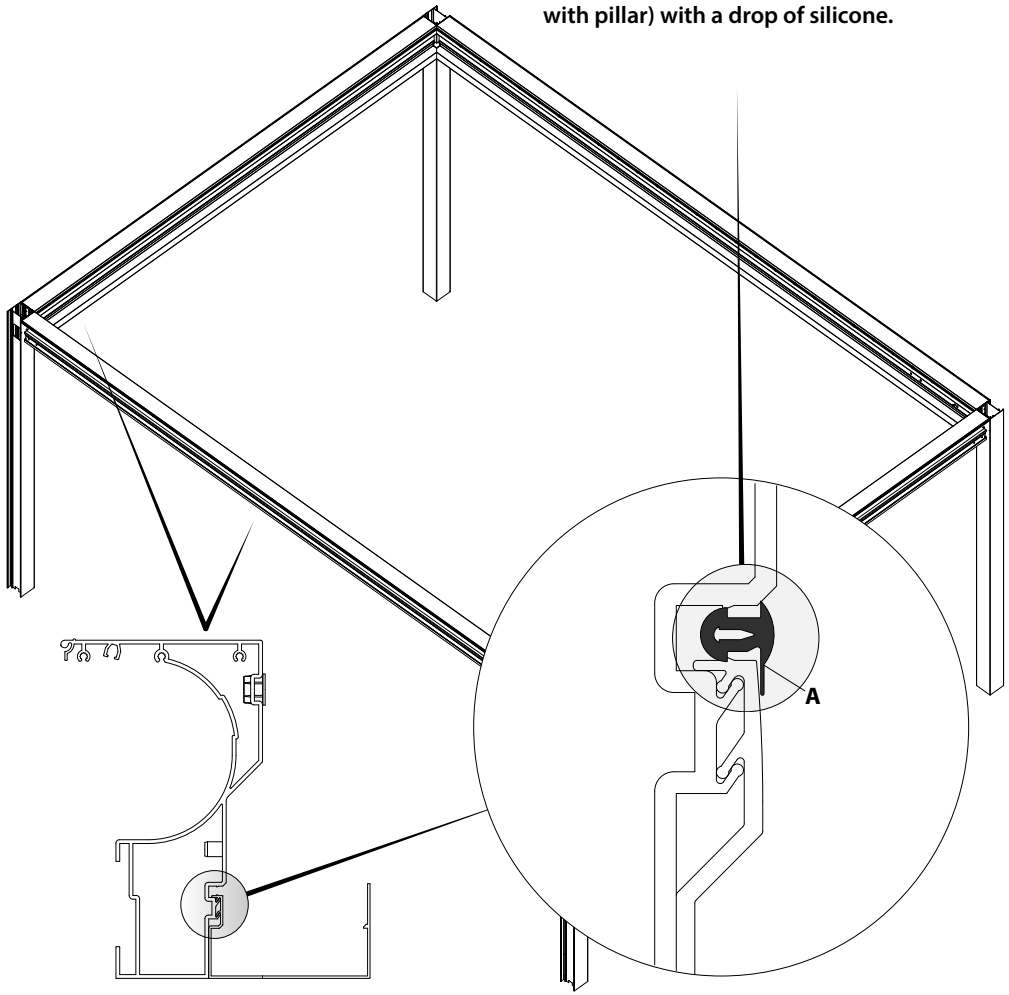

Fig. 32

- After fitting all perimeter gutters and securing them with small seal parts, tighten the structure screws to make the gutters better adhere to the pillars;
- proceed with the final installation of the perimeter seals (**A**) having care to position the seal "lip" downwards.

ATTENTION: A wrong positioning of the seal could lead to seepage problems.

4 GUTTER PROFILE INSTALLATION

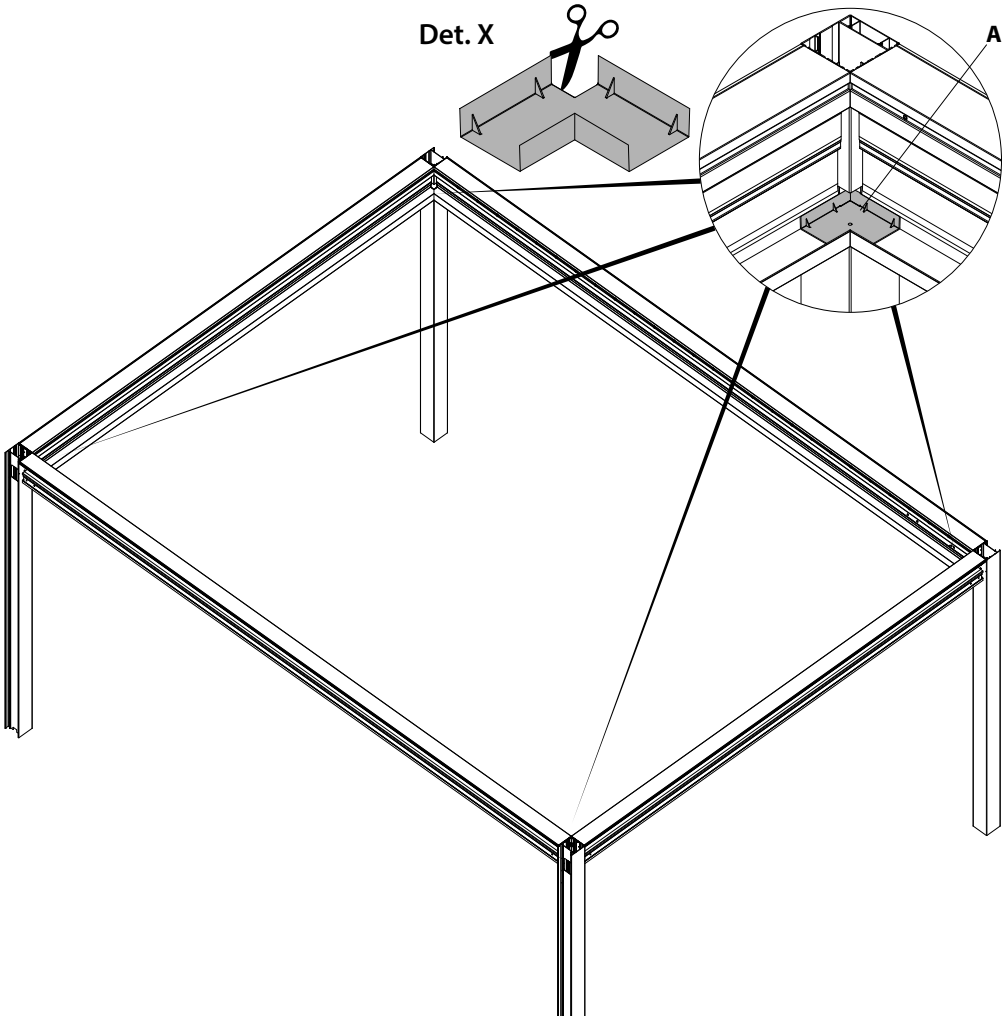

Fig. 33

- Insert the plastic elements (**A**) on the four junction sides of the gutter profile.
  If you wish to let water flow inside the pillar, it is necessary to remove the vertical part (**det. X**) having care to follow the cutting line on the plastic component.

Note: IMPORTANT - Each structure must feature at last 2 out of 4 drainage pillars.

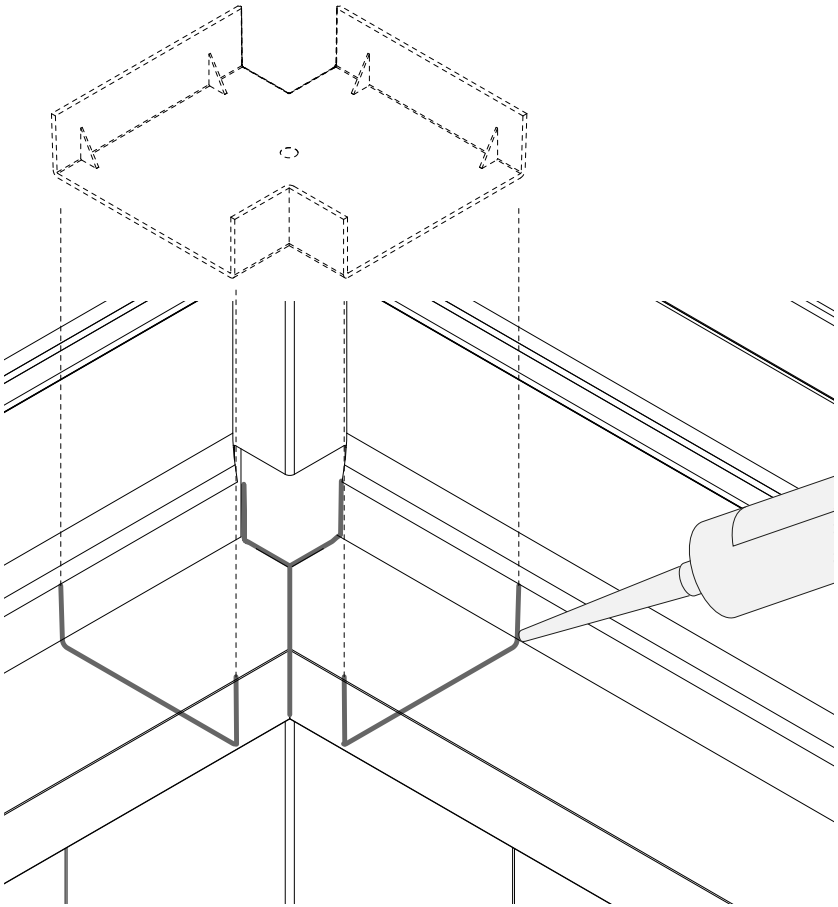

Fig. 34

Note: apply silicone under the plastic component before the installation to avoid any leak.

We recommend applying silicone also inside the gutter before positioning the plastic component. Silicon must be applied in all cases, regardless if the pillar is a drainage pillar or not.

5 SILICONE APPLICATION AREAS

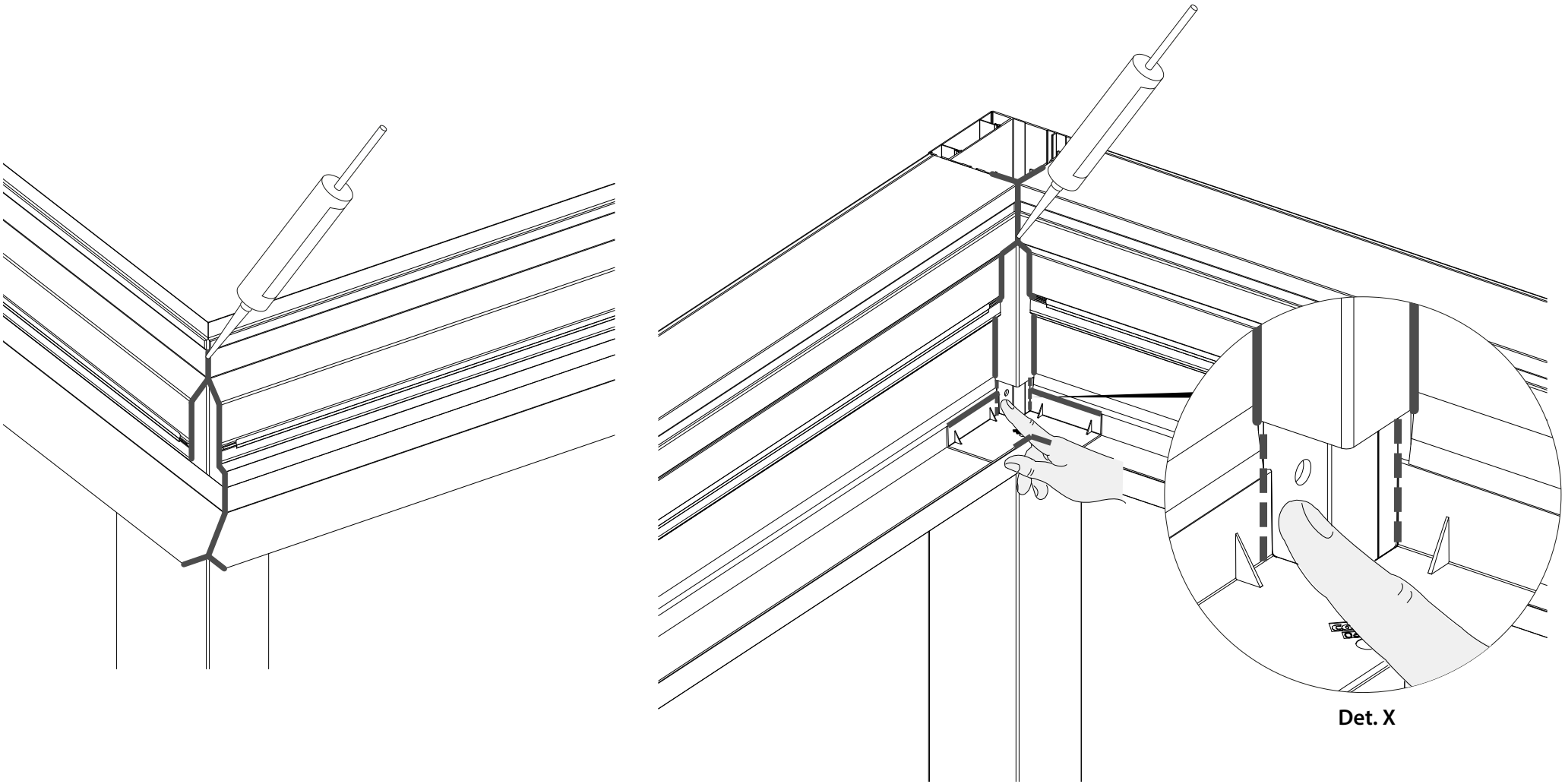

Fig. 35

- Apply silicone in the areas indicated in the figures.

In **det. X** the dashed lines indicate that the silicone must be applied inside the openings.

6 MOTOR ASSEMBLY

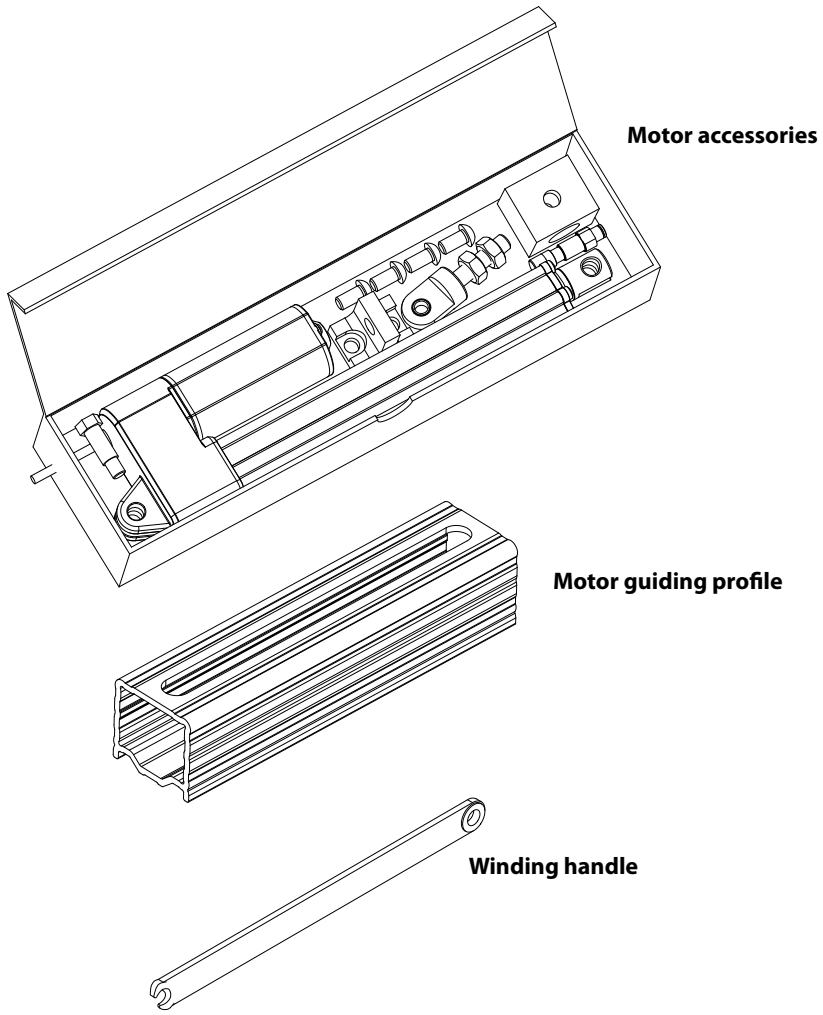

Fig. 36

- Take the above-listed parts from the accessories box.

SUN PROTECTION CONFIGURATION

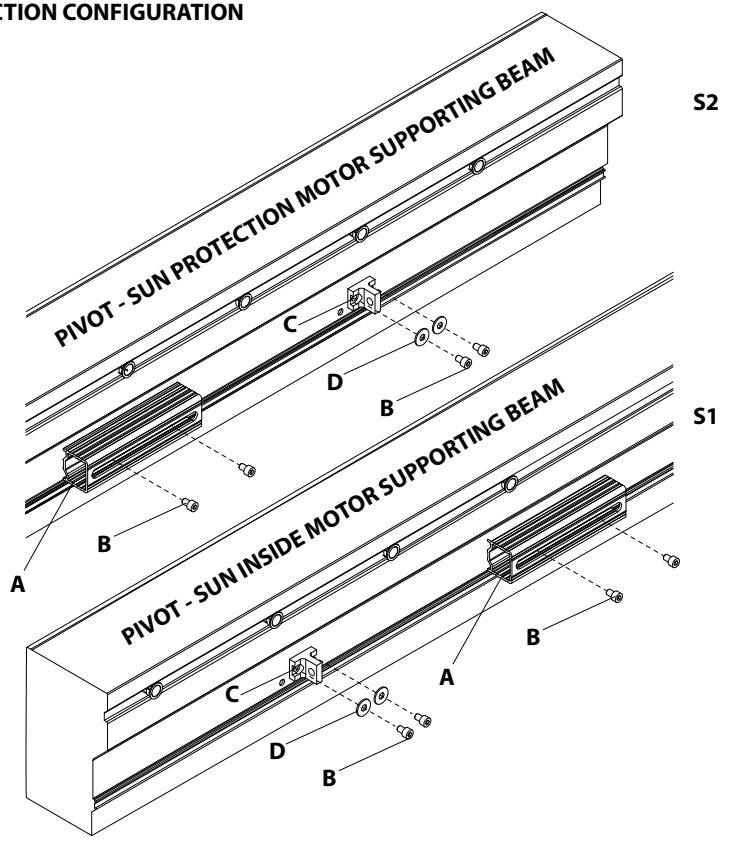

SUN INSIDE CONFIGURATION

Fig. 37

- Secure motor guiding profile (**A**) with the 2 M8x16 screws (**B**);
- secure motor locking plate (**C**) with the 2 M8x16 screws (**B**) and the 2 toothed washers (**D**).

6 MOTOR ASSEMBLY

SUN INSIDE

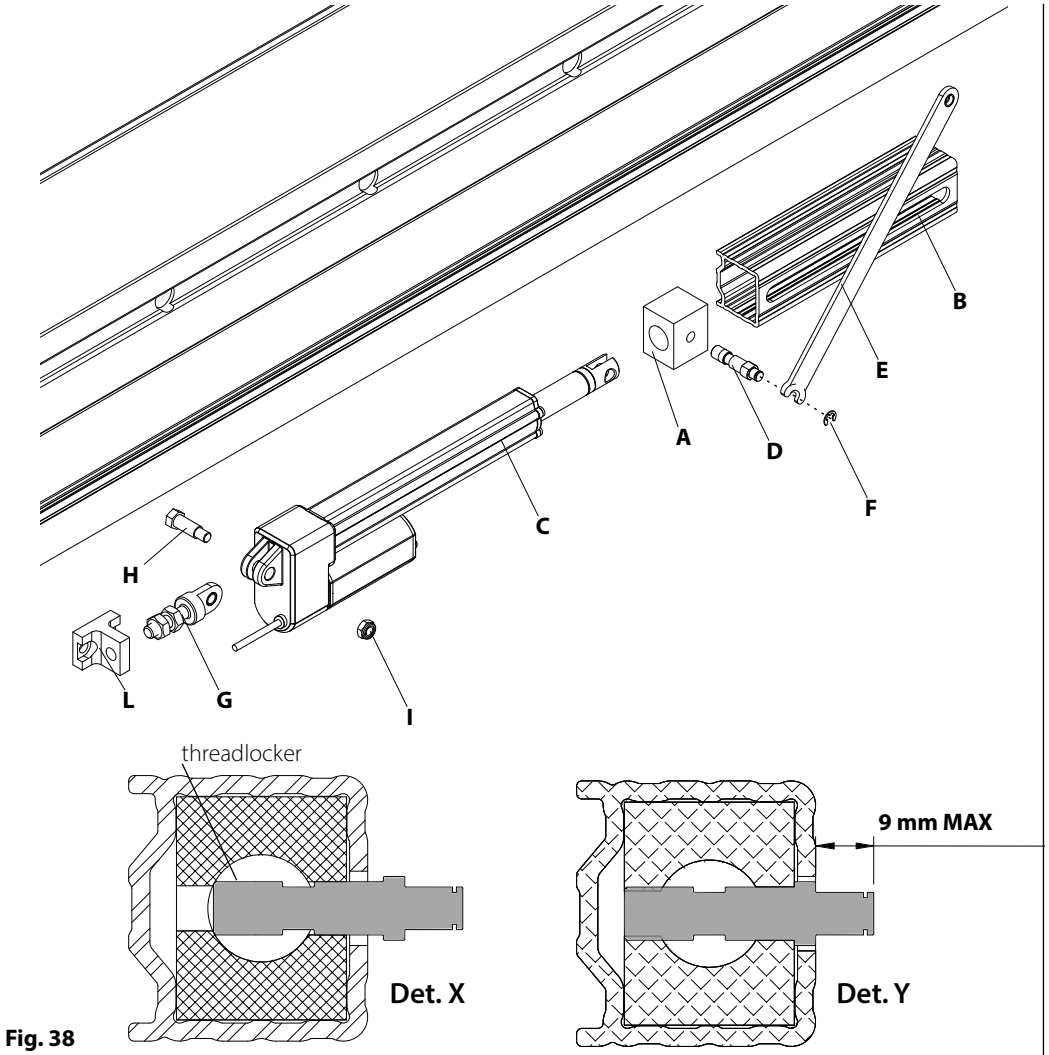

Fig. 38

- Secure motor connector with adjuster (**G**) to motor (**C**) with pin (**H**), and screw it with nut (**I**);
- insert sliding block (**A**) inside motor guiding profile (**B**);
- insert motor stem (**C**) inside sliding block (**A**) taking care to align holes;
- insert pin (**D**) inside the side hole on sliding block (**A**) and, using a hammer, drive everything fully home as shown in the figure above, then screw in (**det. X - Y**);
- insert winding handle (**E**) inside sliding block (**D**) and tighten using circlip (**F**);
- secure motor connector with adjuster (**G**) to block (**L**) with the suitable nuts.

SUN PROTECTION

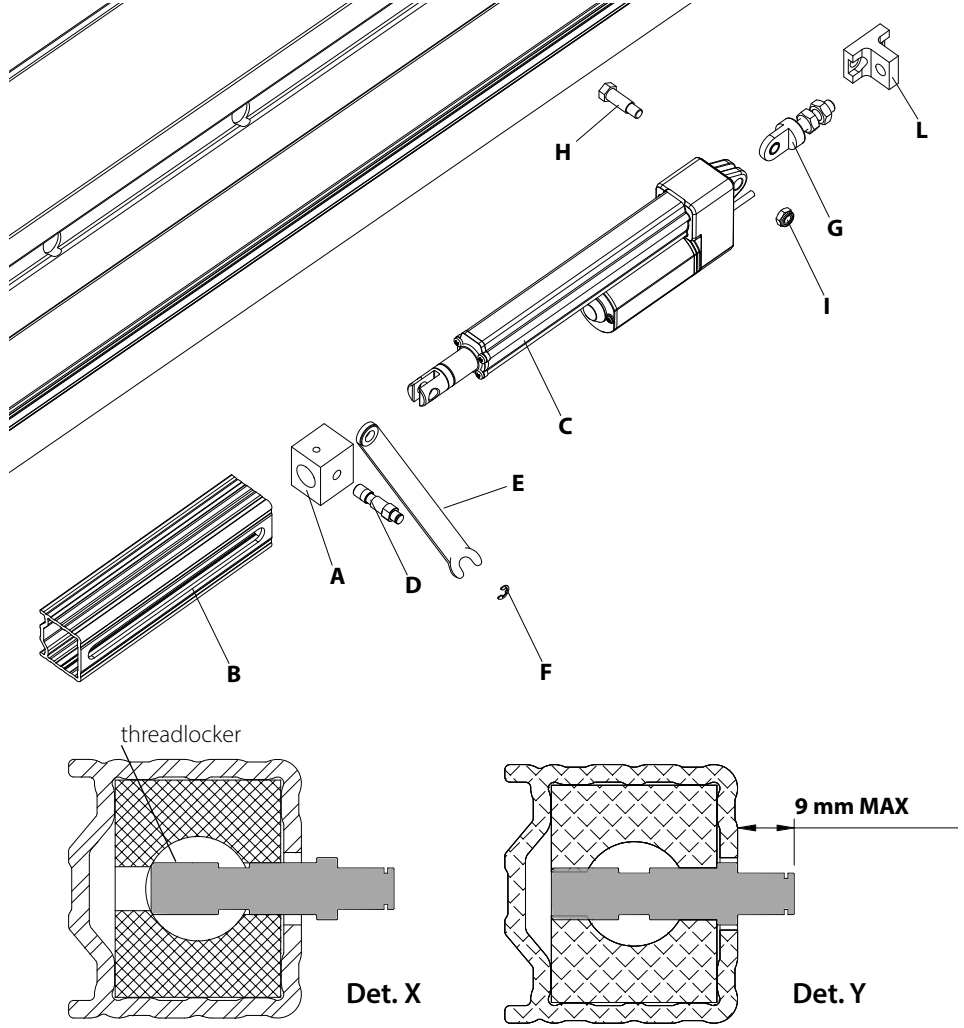

Fig. 39

- Follow the operations shown in fig. 38.

7 MOTOR POWER SUPPLY

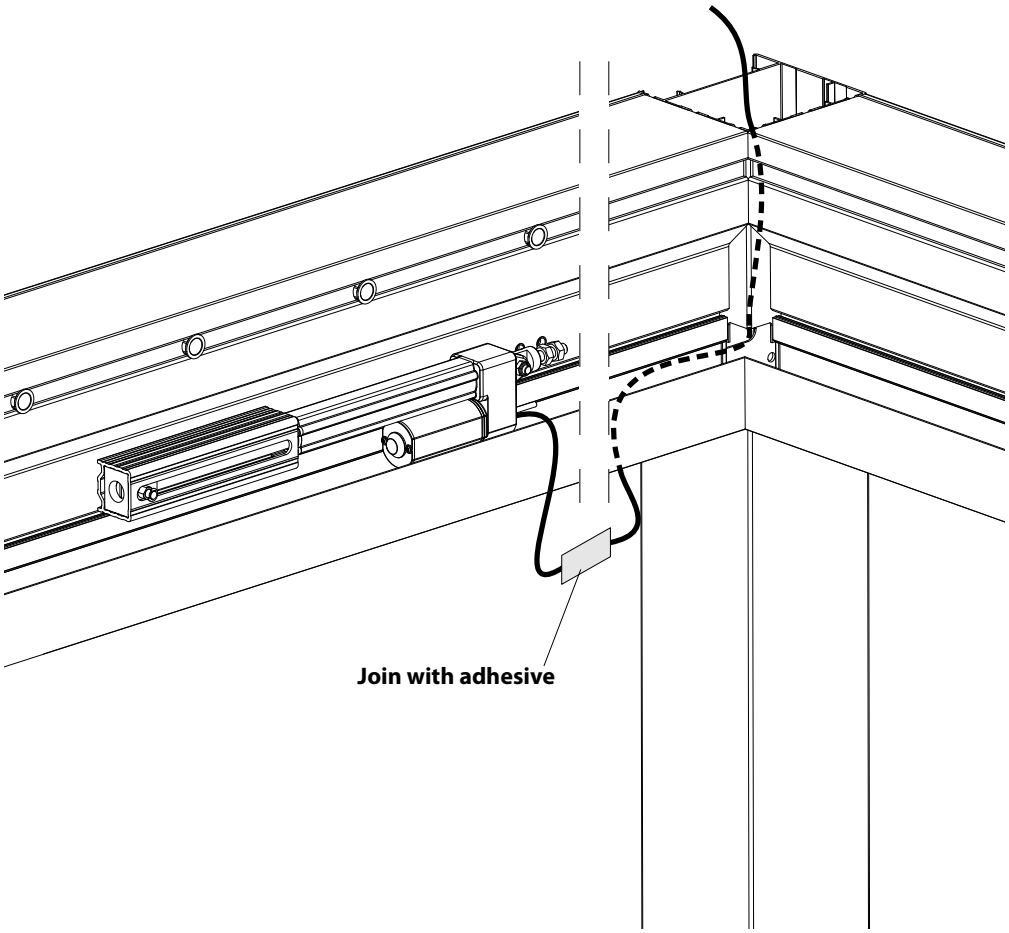

Fig. 40

- Join motor cable with the previously-loosened rubber cord (see fig. 28).
- Insert power cable inside the reinforcement on pillar and remove rubber cord.

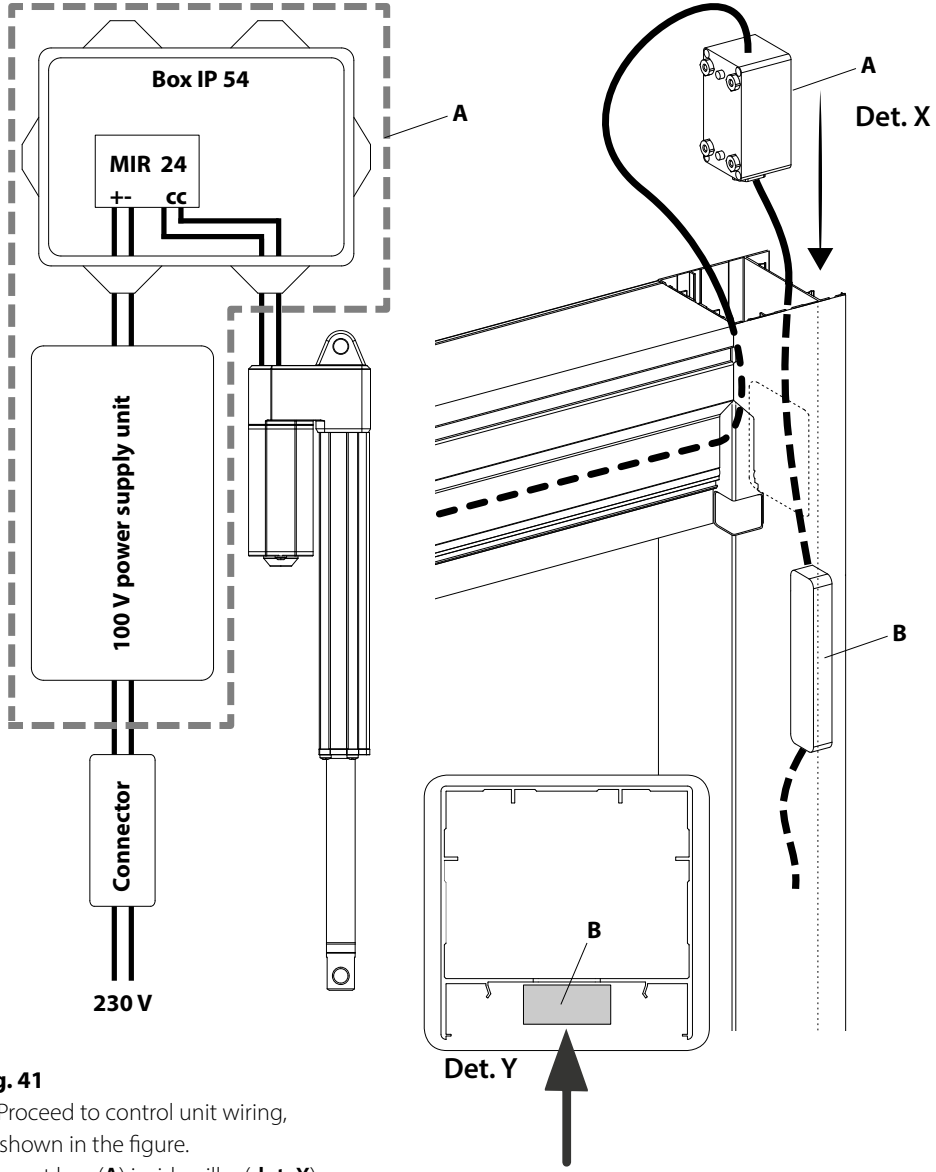

Fig. 41

- Proceed to control unit wiring,
as shown in the figure.
- Insert box (**A**) inside pillar (**det. X**).
- Insert power supply unit (**B**) on the front side of the pillar (**Det. Y**).

8 MOTOR LIMIT SWITCH ADJUSTMENT

MOTOR COVER ASSEMBLY

SLIDING BLOCK IN BLADE OPENING OR CLOSING POSITION BASED ON THE SELECTED CONFIGURATION, I.E. SUN PROTECTION OR SUN INSIDE.

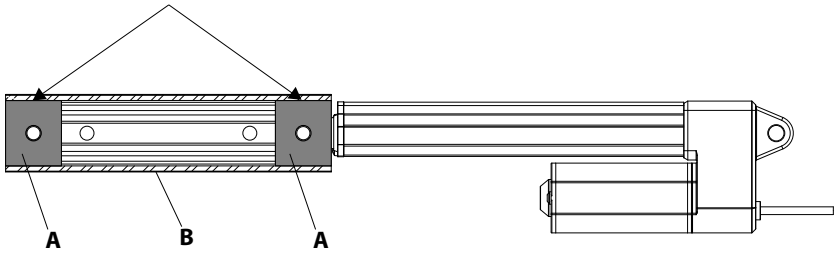

fig. 42 - Motor programming

Note: To set the motor, refer to the instructions provided inside the MIR 24 control unit box; otherwise, you can find them in the reserved area of the CORRADI.EU website.

- Adjust motor limit switches as shown in the figure; sliding block travel (**A**) must be within the two final sections of motor guiding profile (**B**).

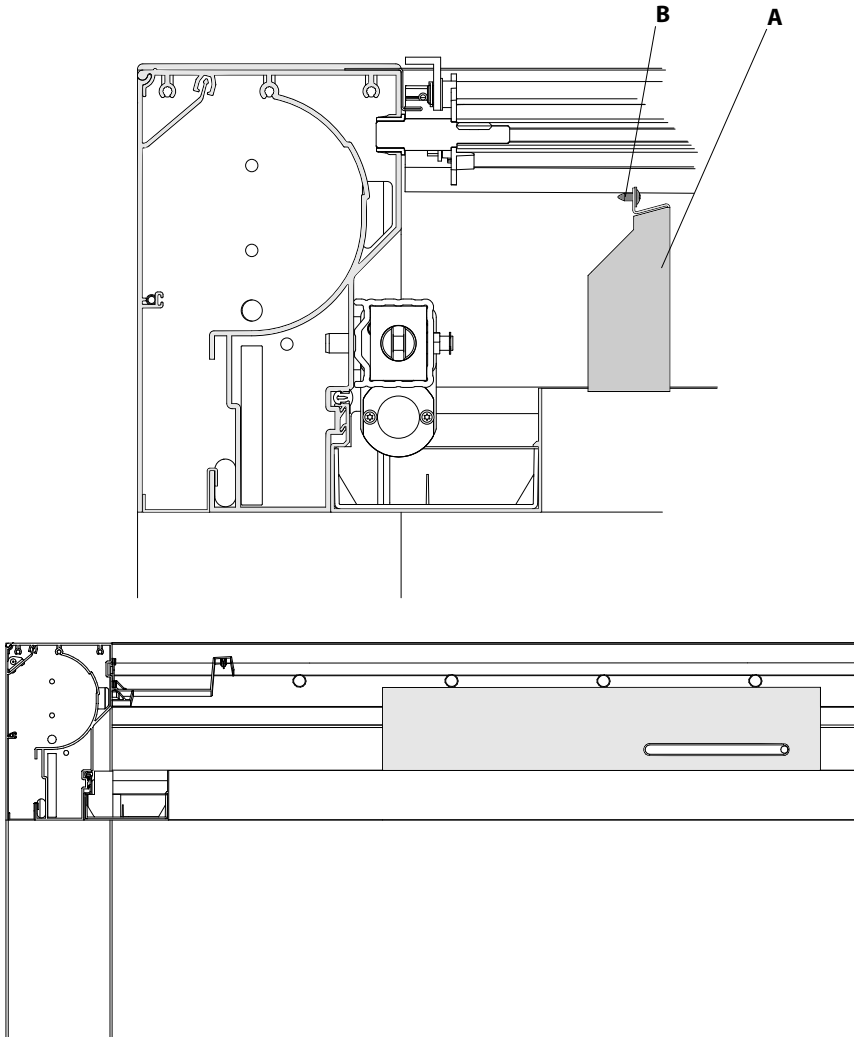

Fig. 43

- Temporarily remove the winding handle and insert casing (**A**) by screwing it with the suitable short self-drilling screws (**B**);
- refit the winding handle.

9 COMPENSATION BLADE ASSEMBLY

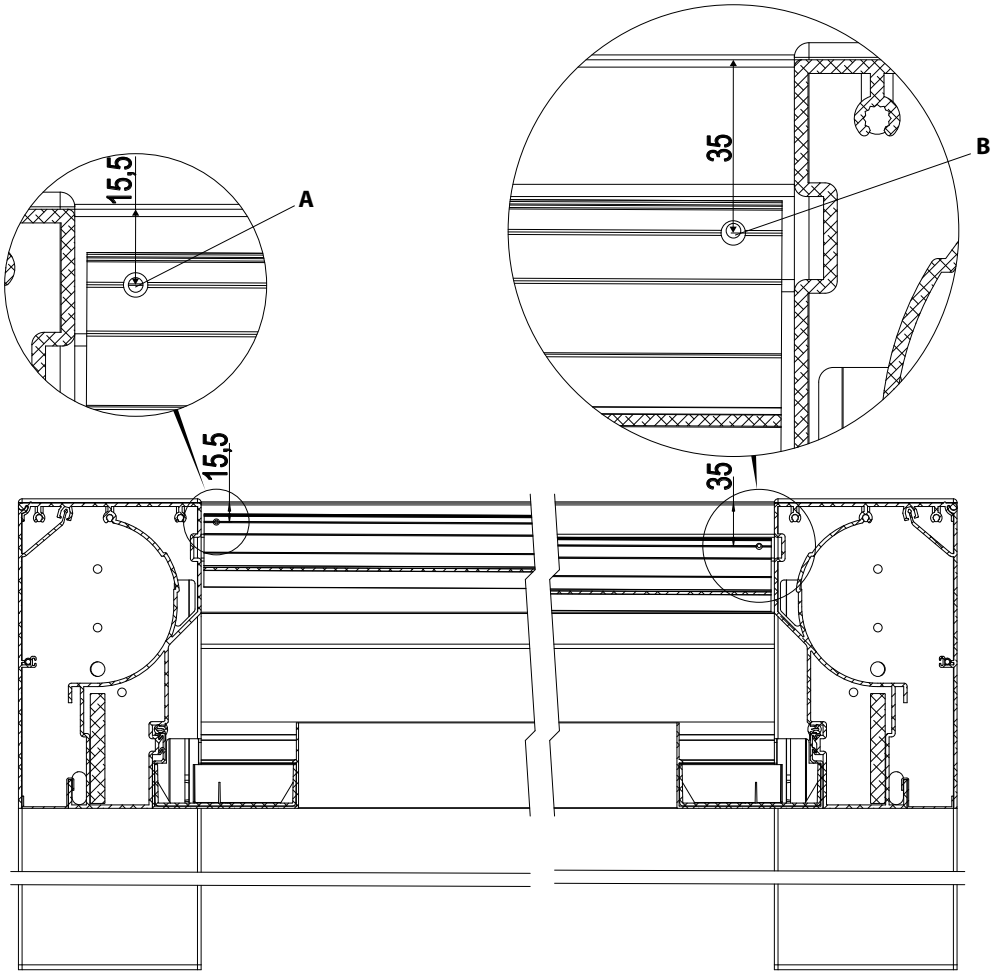

Fig. 44

- Secure profiles to SPAN-side beams using the two holes present on blade support (**A**) and on beams (**B**) and by means of the long self-drilling screws;
- screw self-drilling screws on the whole length of profile, pre-drilling a ø3 hole every 50 cm approximately.

Note: Take special care not to reverse the supports before screwing them inside the SPAN-side beams.

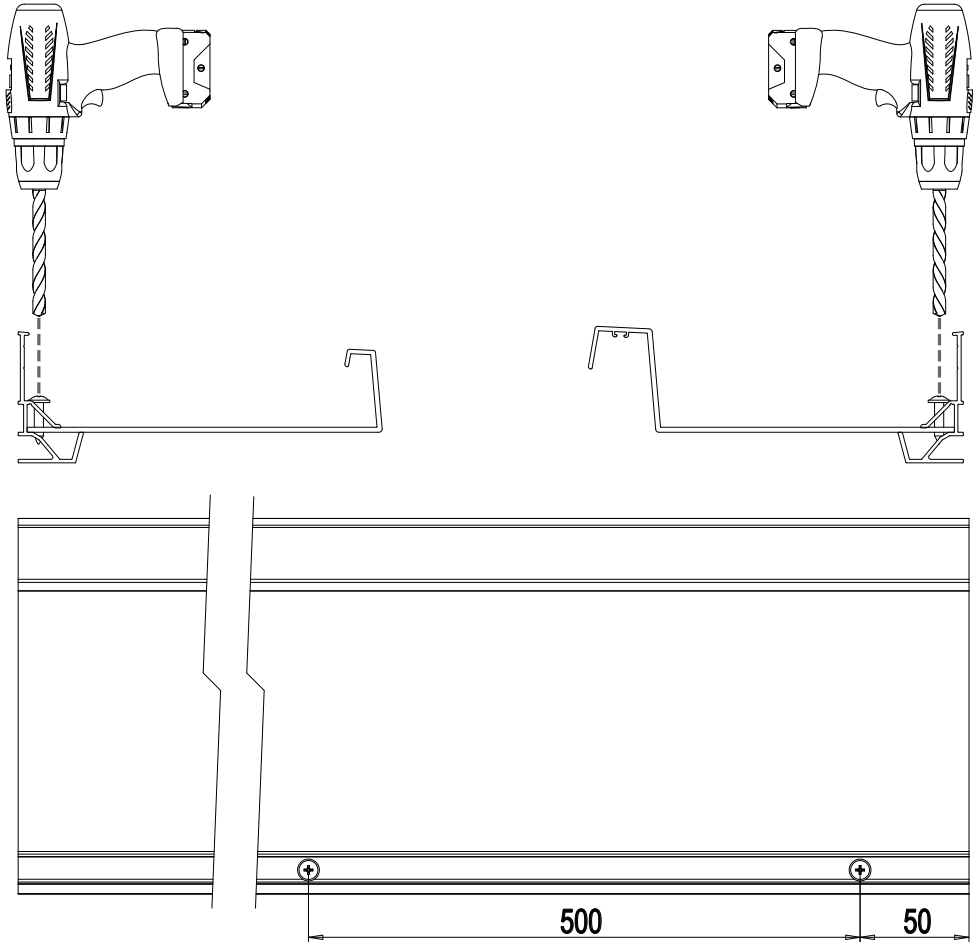

Fig. 45

- Secure compensation blades to the support, duly fastened to the SPAN-side beam, drilling a ø3 hole every 50 cm approximately, then screw the long self-drilling screws.

Note: Drill at right angles with fixed blades.

10 CONTROL BLADE ASSEMBLY

CONTROL BLADE Q.ty 1

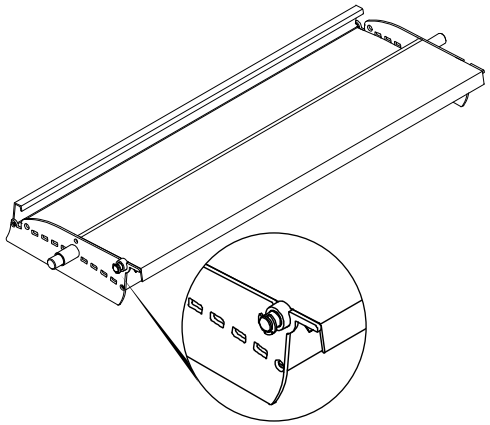

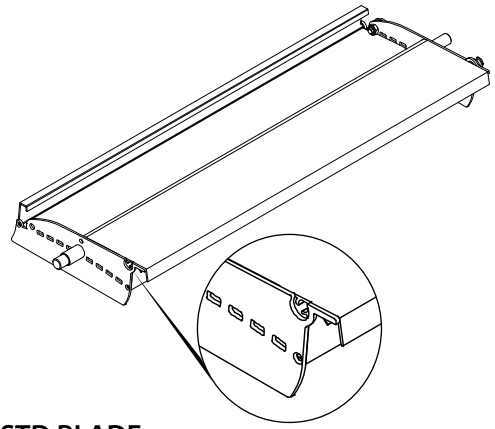

STD BLADE

CONTROL BLADE
SUN PROTECTION CONFIGURATION

BLADE OPENING DIRECTION

1

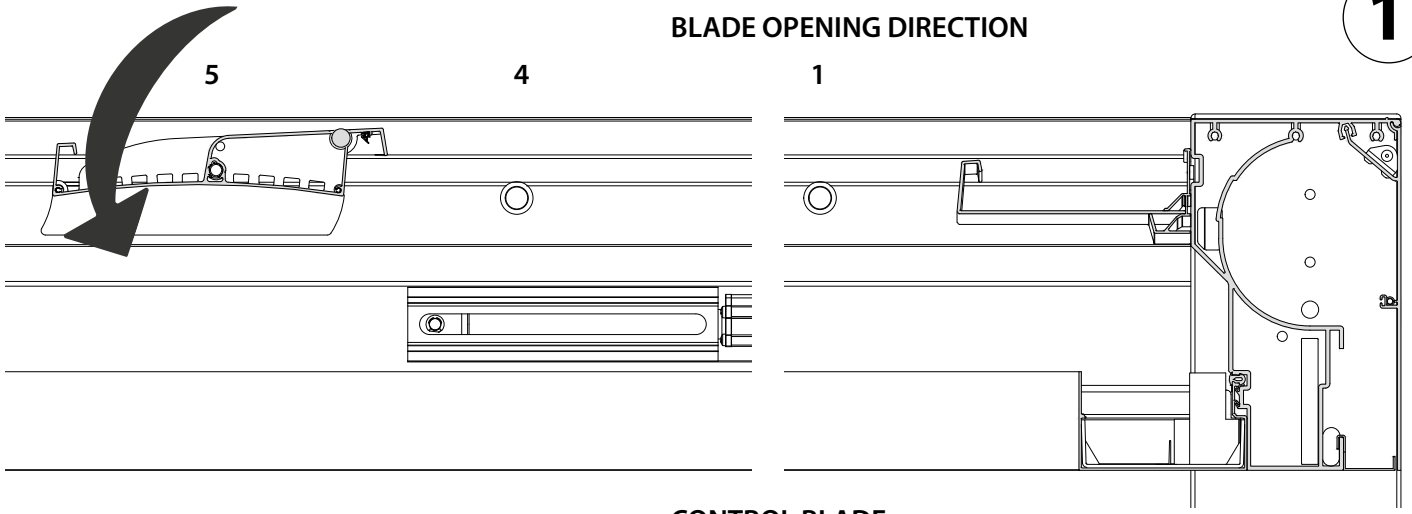

CONTROL BLADE
SUN INSIDE CONFIGURATION

BLADE OPENING DIRECTION

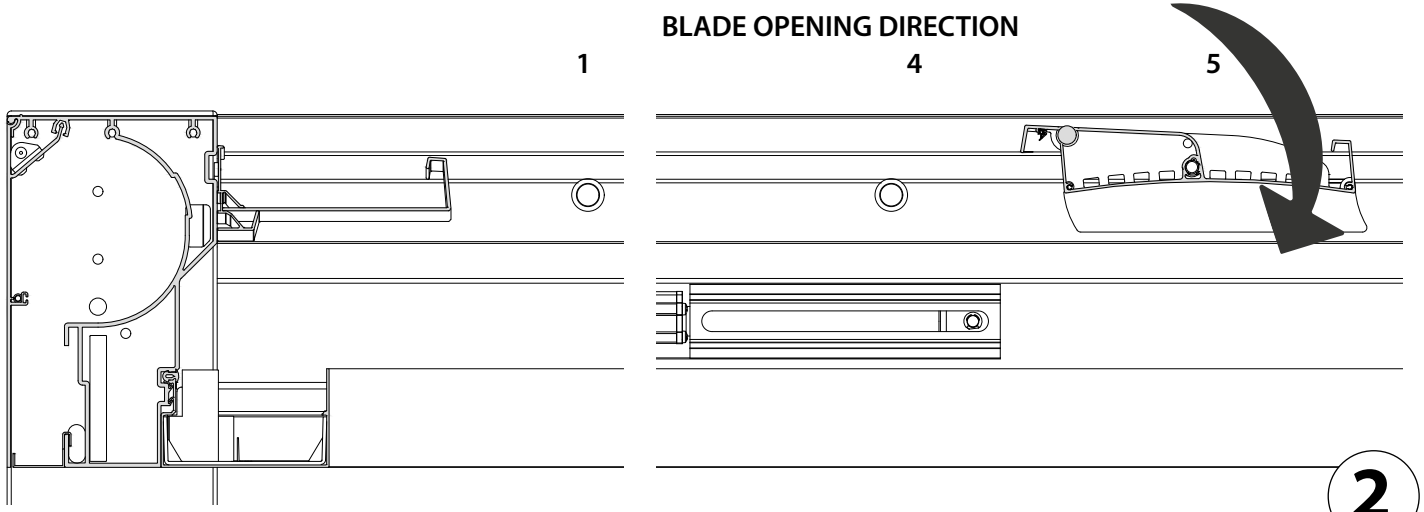

2

Fig. 46
Note: In "SUN PROTECTION" configuration, install control blade inside the fifth hole from the right (see image 1).
Note: In "SUN INSIDE" configuration, install control blade inside the fifth hole from the left (see image 2).

11 BLADE WITH LIGHT ASSEMBLY

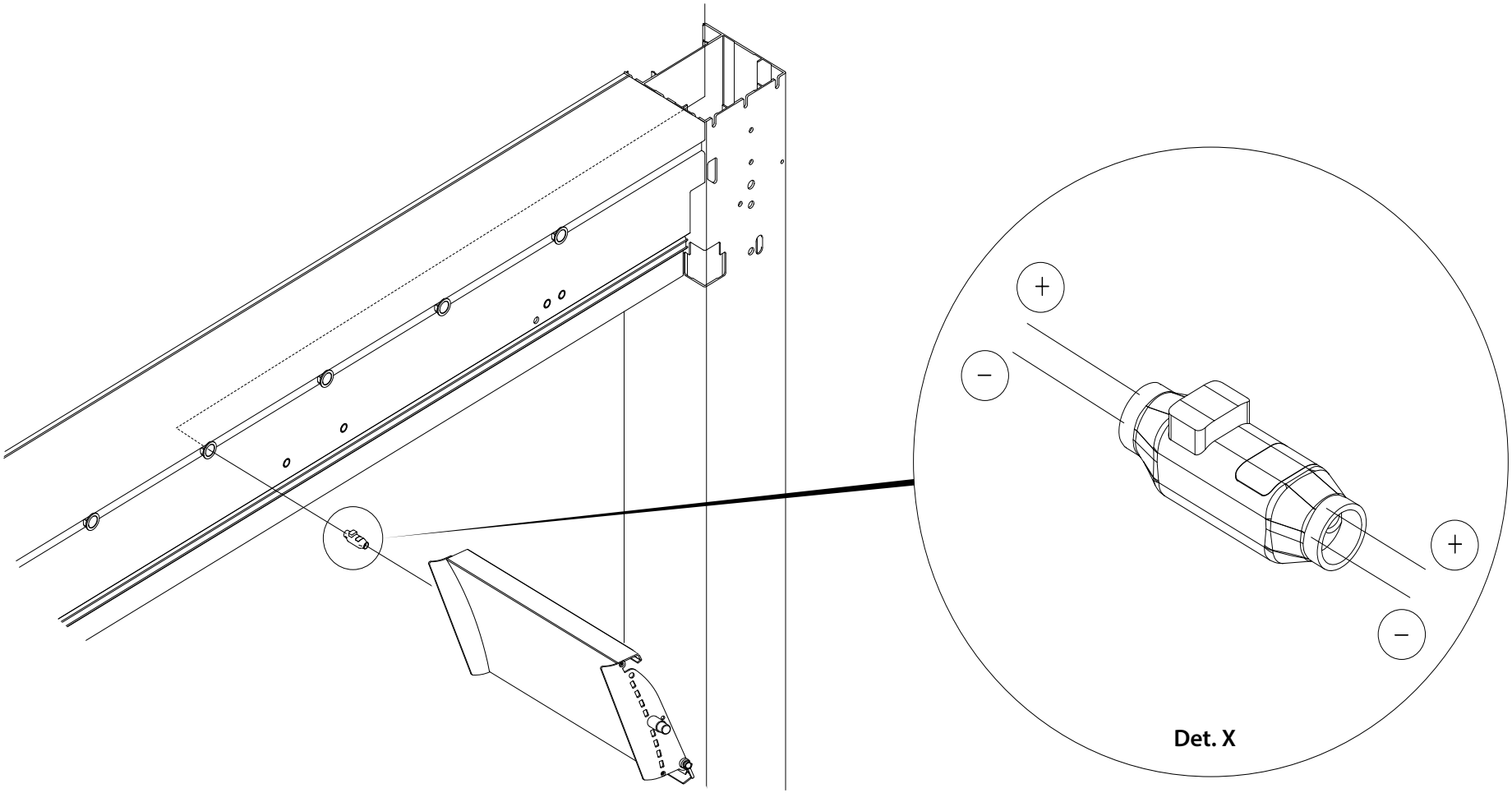

Fig. 47

- Connect the cable coming out of light blade to IP 67 connector, taking care not to reverse the polarities of the light bar (**det. X**);
- insert connector inside beam through the hole present on bush.

12 ASSEMBLY OF BLADES WITH SWIVEL BRACKET SUPPORT

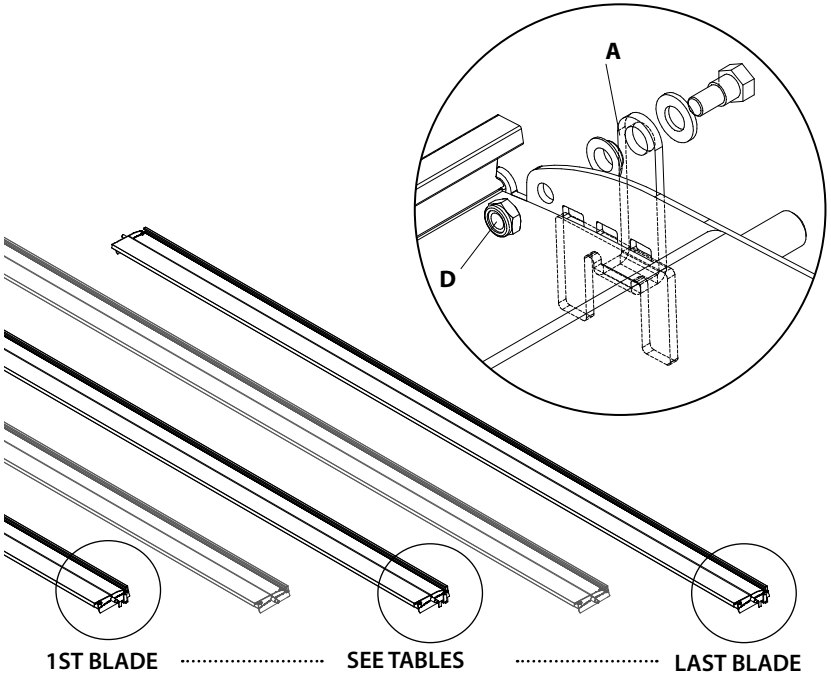

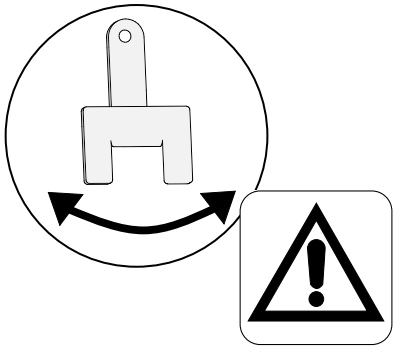

M MOTOR POSITION
BLADE WITH PLATE
BLADE WITHOUT PLATE

BLADE NO.

NUMBER OF BLADES PRESENT IN THE STRUCTURE

	1	2	3	4	5	6	7	8	9	10	11	12	13	14	15	16	17	18	19	20	21	22	23	24	25	26	SUPPORT NO.
11					M																						3
12					M												SUN PROTECTION MOTOR SUPPORT POSITION										3
13					M																						3
14					M																						4
15					M																						4
16					M																						4
17					M																						4
18					M																						4
19					M																						5
20					M																						5
21					M																						5
22					M																						5
23					M																						6
24					M																						6
25					M																						6
26					M																						6

	1	2	3	4	5	6	7	8	9	10	11	12	13	14	15	16	17	18	19	20	21	22	23	24	25	26	
11							M																				3
12								M									SUN INSIDE MOTOR SUPPORT POSITION										3
13									M																		3
14										M																	4
15											M																4
16												M															4
17													M														4
18														M													5
19															M												5
20																M											5
21																	M										5
22																		M									5
23																			M								6
24																				M							6
25																					M						6
26																						M					6

Fig. 48

Use the table to identify the blades on which the support plates will be fixed. Fix the swivel bracket system support plate **(A)** to the pins of these blades (on bode sides of the blade).

NOTE: the central blade could have a gap.

IMPORTANT: do not tighten the nut (D) completely, the component (A) must be free to oscillate.

13 BLADE ASSEMBLY

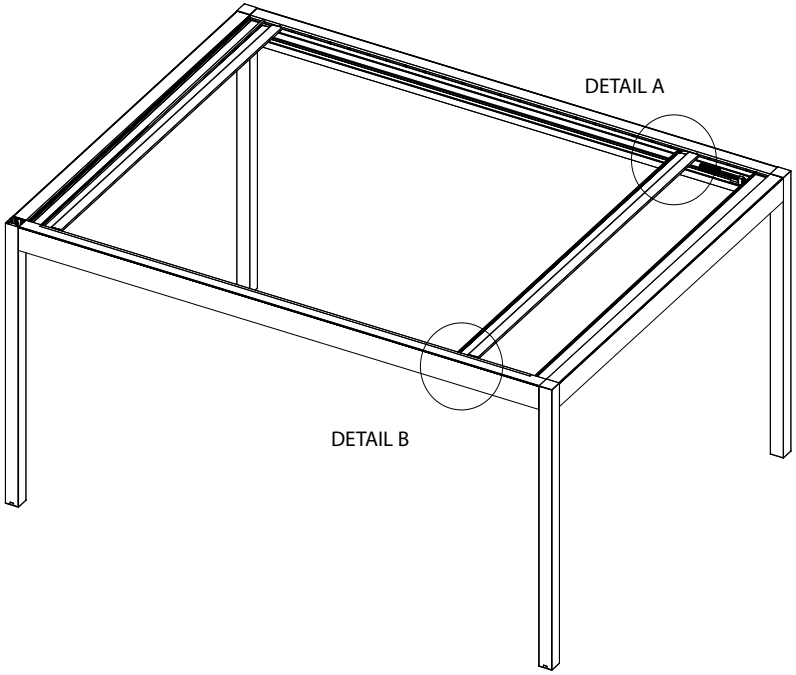

DETAIL A

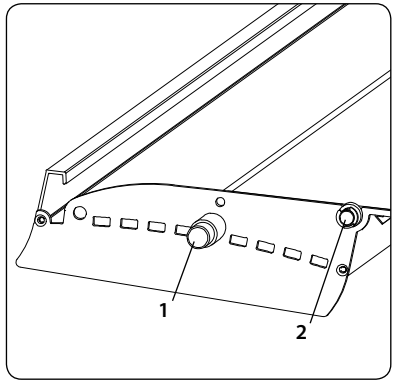

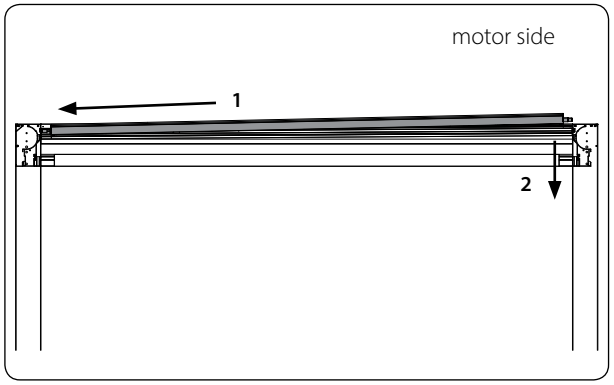

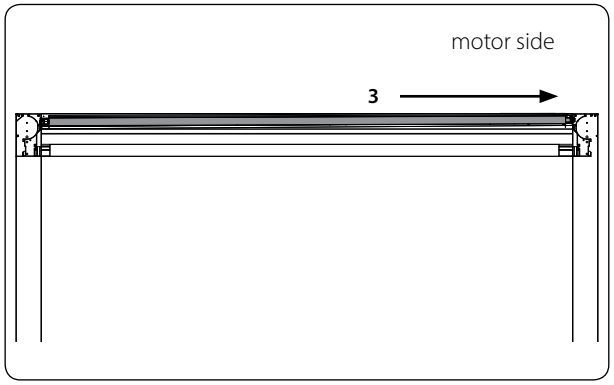

DETAIL B

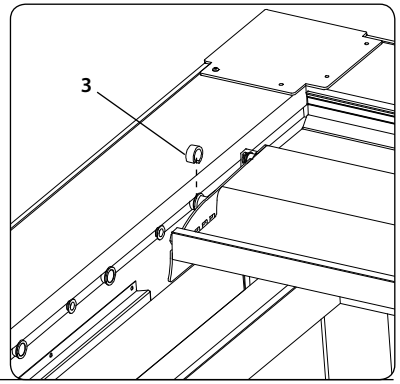

Fig. 49

1. Fit control blade, the fifth from the right or left, depending on the selected configuration and the last one on structure outer edge
- Blade with 1 pin = Idle side
- Blade with 2 pins (big pin **1** and small pin **2**) = Motor side **(DETAIL A)**.

2. Turn blade, let pin slide as much as possible inside the special hole on bearing-side frame **1**. Put blade in horizontal position **2** and slide pin along the other side inside the frame profile on the opposite side **3**. Secure the blade with a fastener on the bearing-side pin **3 (DETAIL B)**.

13 BLADE ASSEMBLY

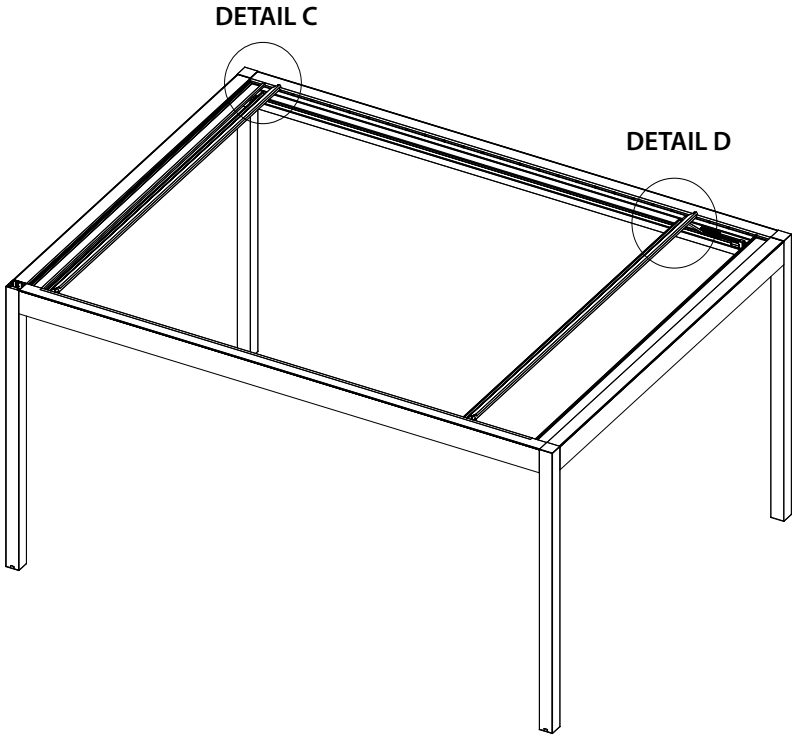

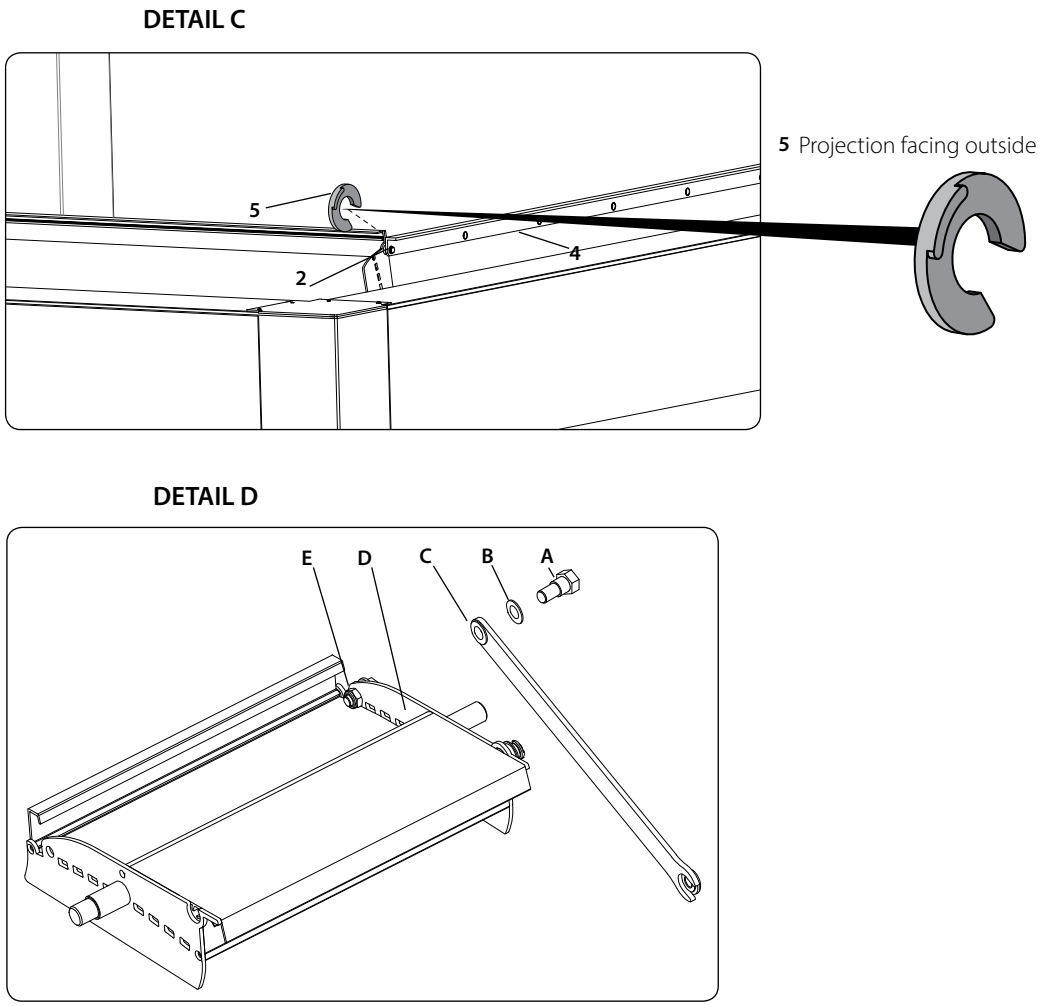

Fig. 50

1. Fix the guiding profile **4** to the small pin **2** of the two external blades **(DETAIL C)**. Fix with one fastener **5**.
   - Position fastener with the projection facing out.
2. Fix winding handle (**C**) to control blade (**D**).
   - Insert pin (**A**) inside winding handle (**C**), putting washer (**B**) in-between;
   - screw everything to blade (**D**);
   - tighten the assembly with nut (**E**) **(DETAIL D)**.

13 BLADE ASSEMBLY

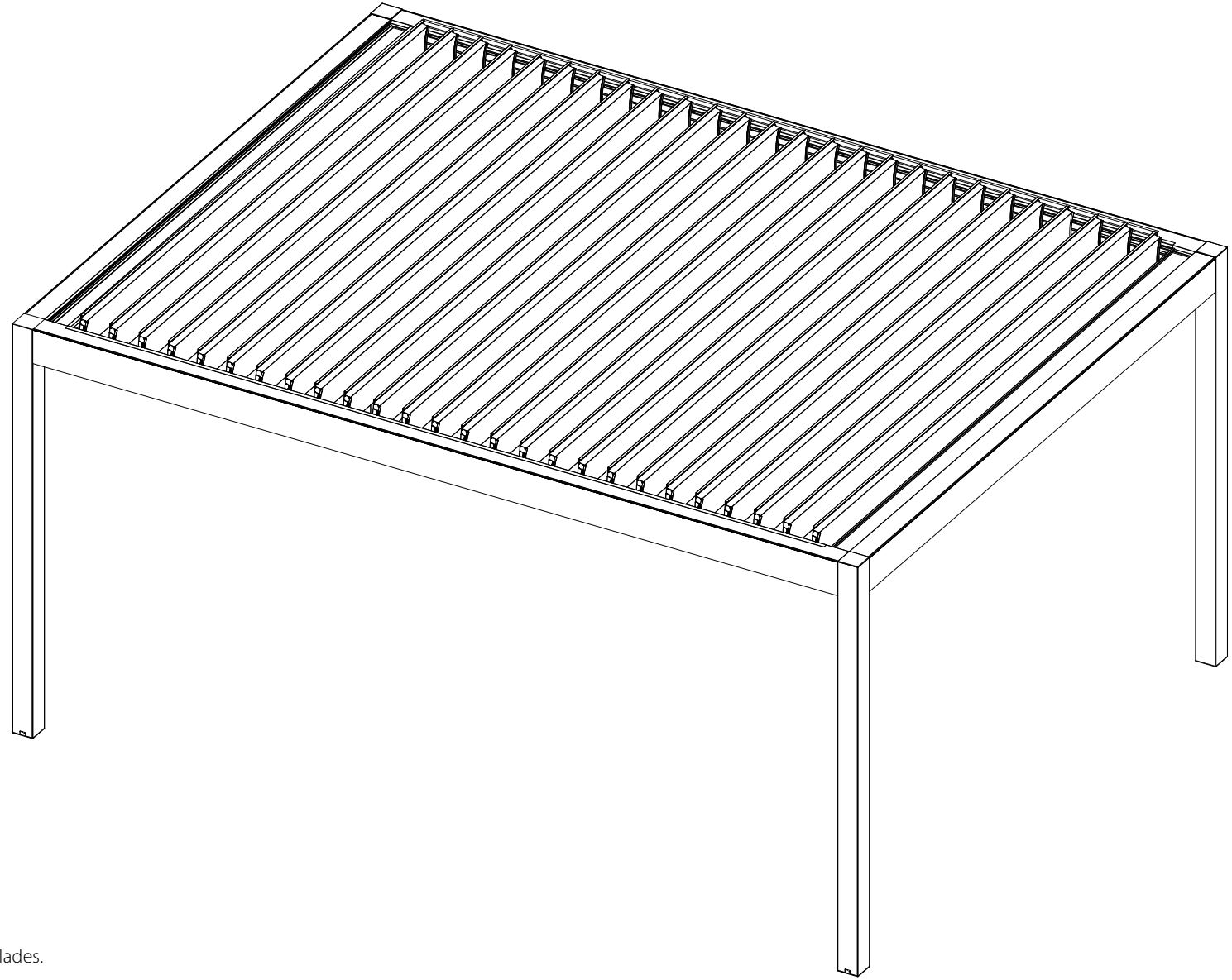

Fig. 51

- Repeat the operations for all blades.

14 COVER AND ACCESSORY PROFILE ASSEMBLY

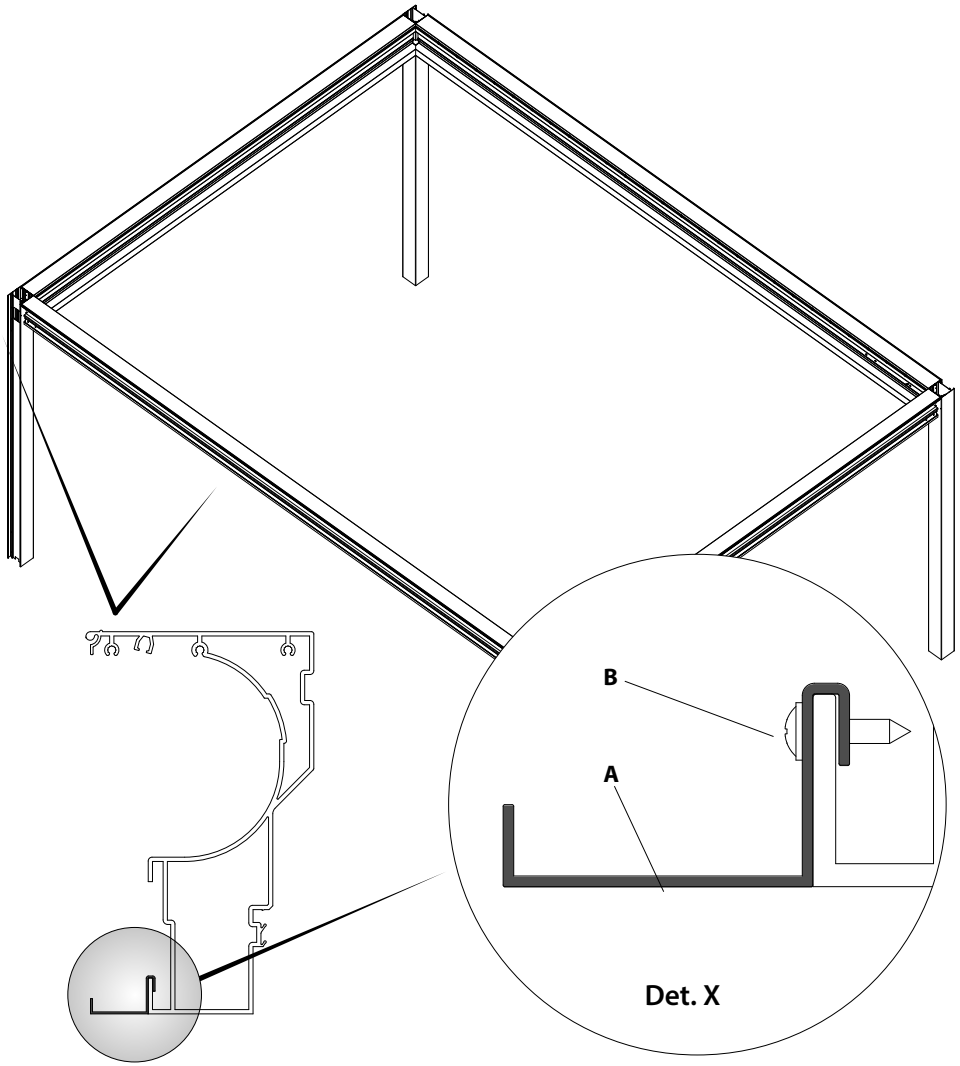

Fig. 52
If SCREEN is not to be installed on the side, close the gap with the suitable profile **(A) (det. X).**
- Fix the profile with the suitable short self-drilling screws **(B)**, by placing one every 50 cm (approximately).

14 COVER AND ACCESSORY PROFILE ASSEMBLY

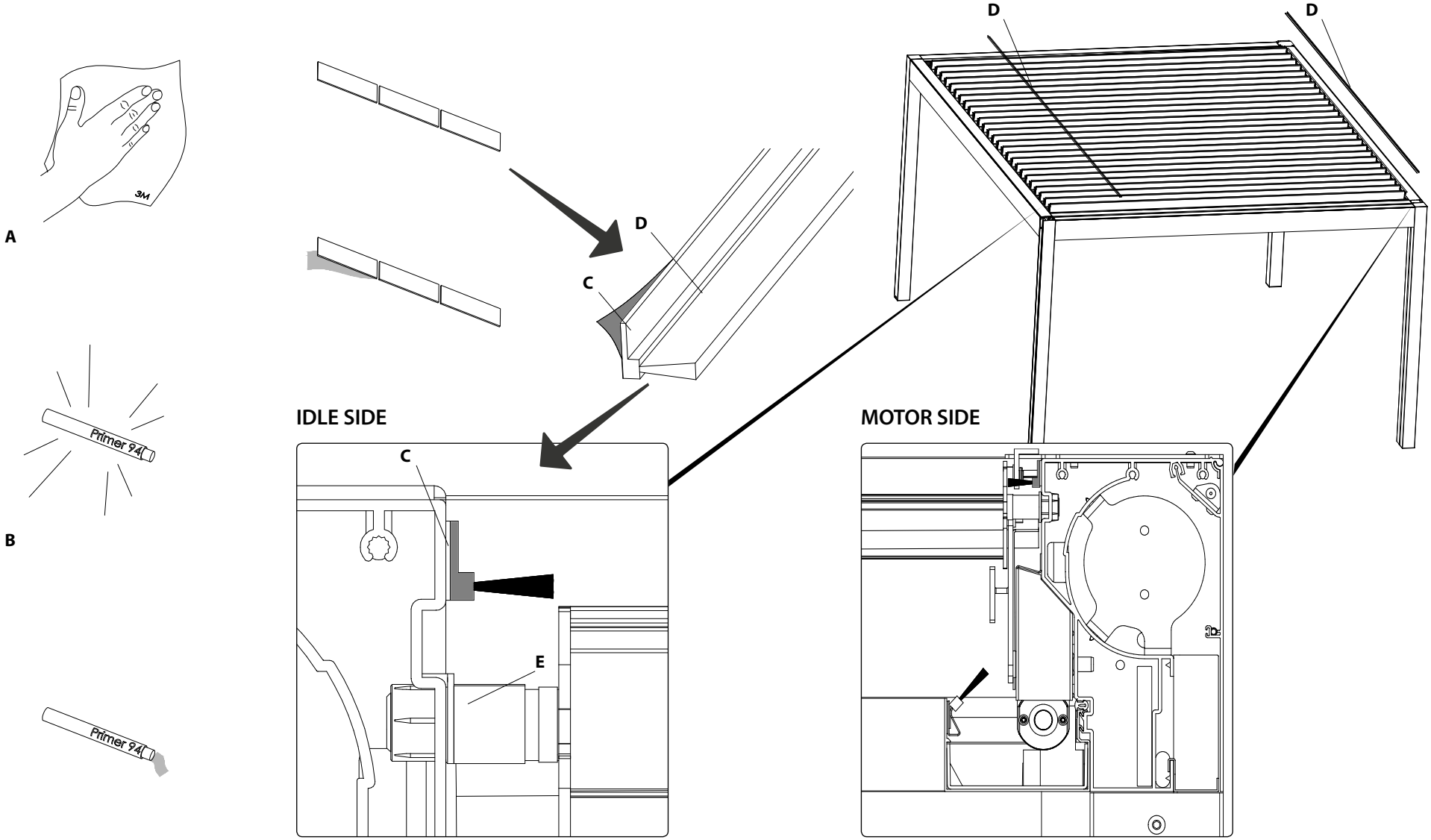

Fig. 53

Open the blades. Cut the brush to measure (pivot side).

Clean the indicated areas **(C)** - beam and brush - with the supplied wipe. **(A)**

Press the bottle in the middle until it breaks **(B)** then dampen the top of the block before applying it in the indicated areas **(C)**.

Remove the film and apply the adhesive tape to the brush **(D)**. Remove the film of the double-sided adhesive tape applied to the brush and fix it to the beam flush to the pins **(E)** of the blades.

NOTE: follow the upper line of the beam with the brush.

15 SWIVEL BRACKET PROFILE INSTALLATION

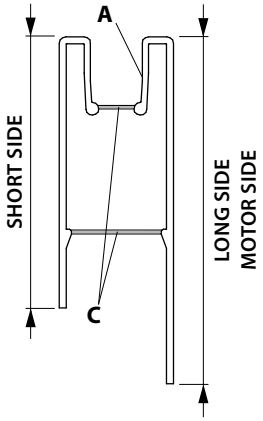

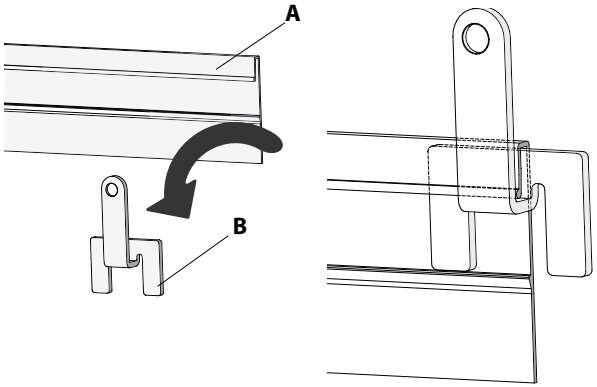

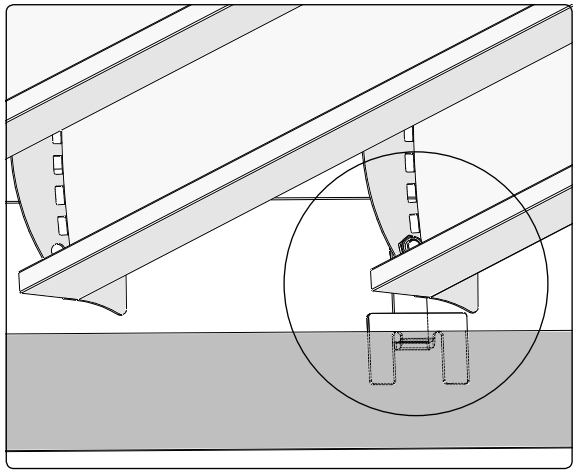

REMOVE THE STRIPS(C) TO DIVIDE THE SWIVEL PROFILES

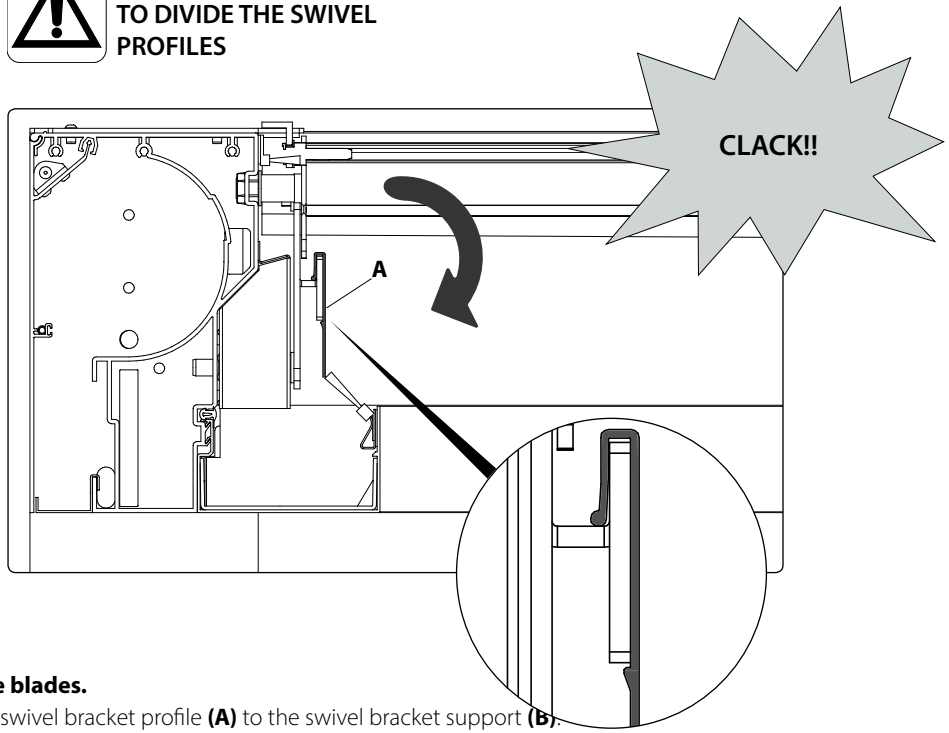

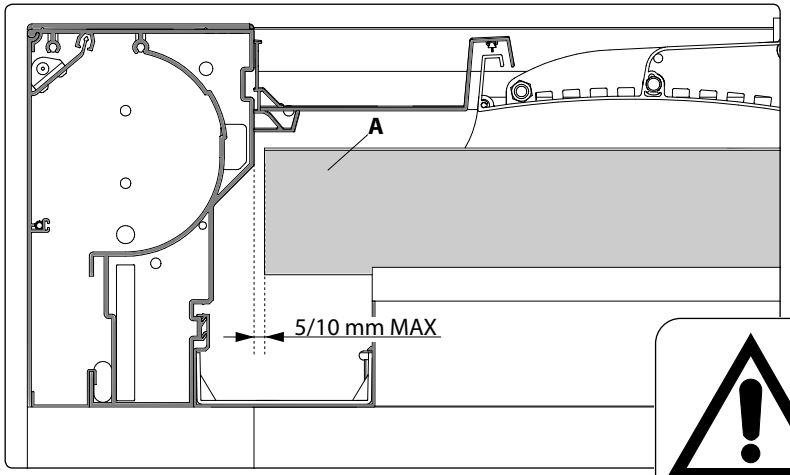

IMPORTANT: FROM THE SIDE OPPOSITE TO THE MOTOR

Fig. 54
Close the blades.
Hook the swivel bracket profile **(A)** to the swivel bracket support **(B)**.
At the opposite end of the motor, move the swivel bracket profile at approx. 5/10 mm from the span side beam.

16 SUPPLEMENTARY PILLAR

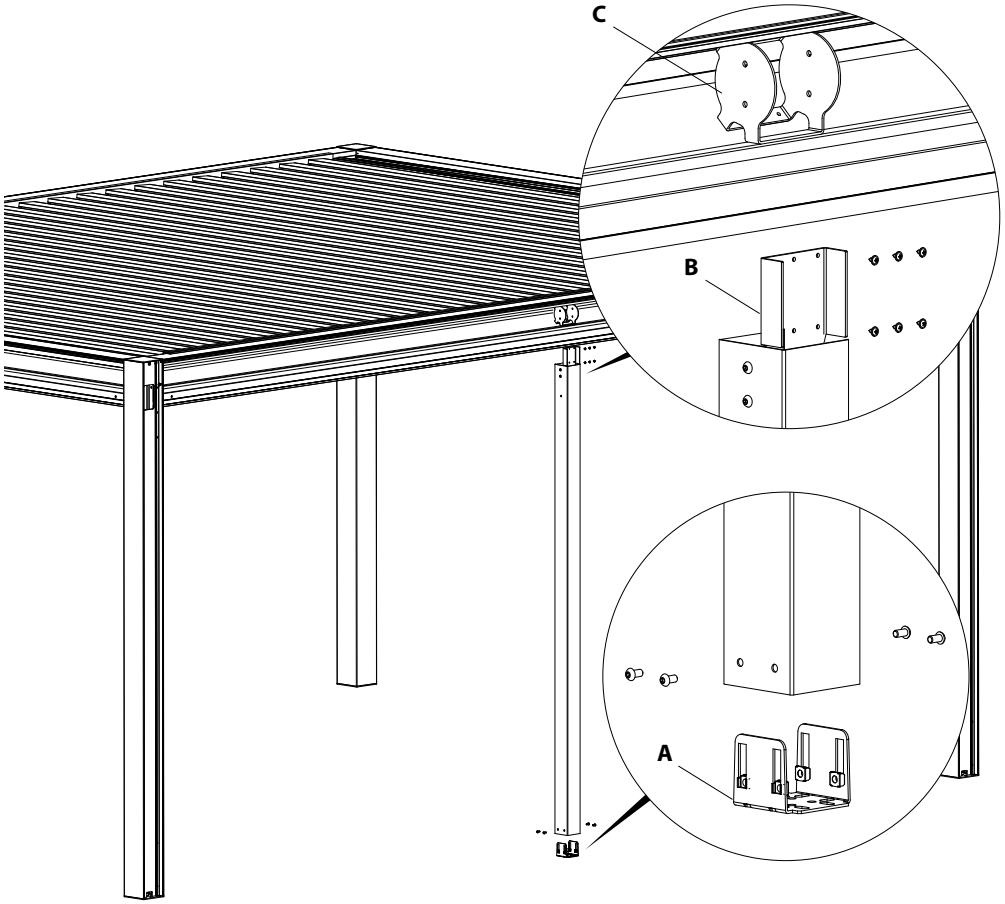

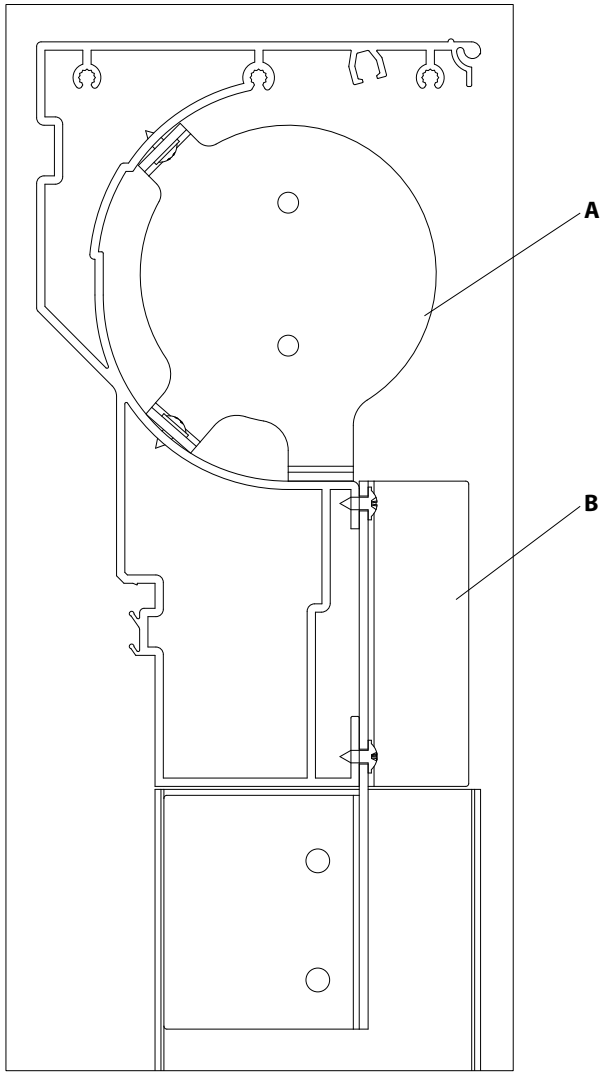

Fig. 55

- Fix plate (**A**) to the ground (in a position according to the opening to obtain);
- fix plate (**B**) on the pole using the supplied Button screws;
- insert the pole first to the ground and then bring the upper plate against the profile;
- fix the upper plate using the (short) self-drilling screws, keeping the pole perfectly vertical;
- fit the SCREEN support plate (**C**) using the short self-drilling screws keeping it aligned to the pillar side surface.

17 SCREEN INSTALLATION

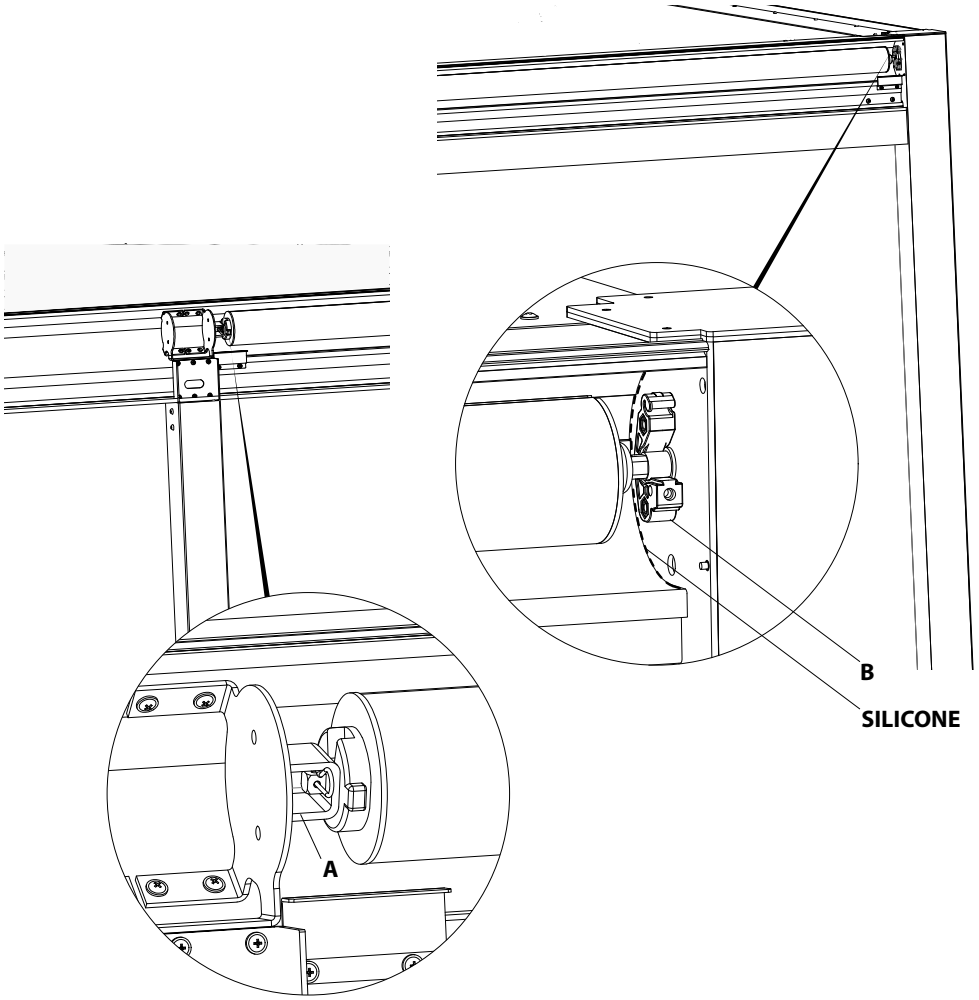

Fig. 56

- On each side chosen for the closure installation, install the suitable connections on the internal sides: the motor support (**A**) on the pillar or on the intermediate pillar, and the idle pin support (**B**) on the opposite pillar.

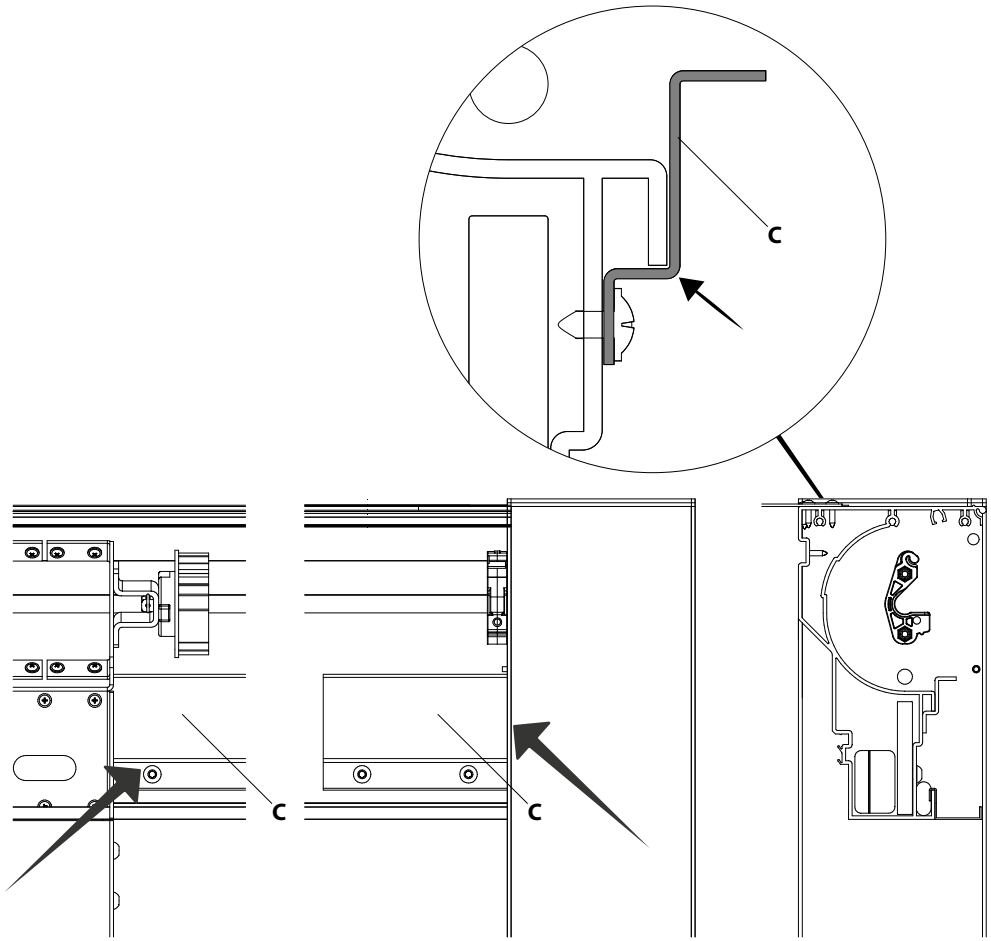

Fig. 57

- Fit brackets (**C**) fully home on both sides with short self-drilling screws in the areas indicated in the figure.

17 SCREEN INSTALLATION

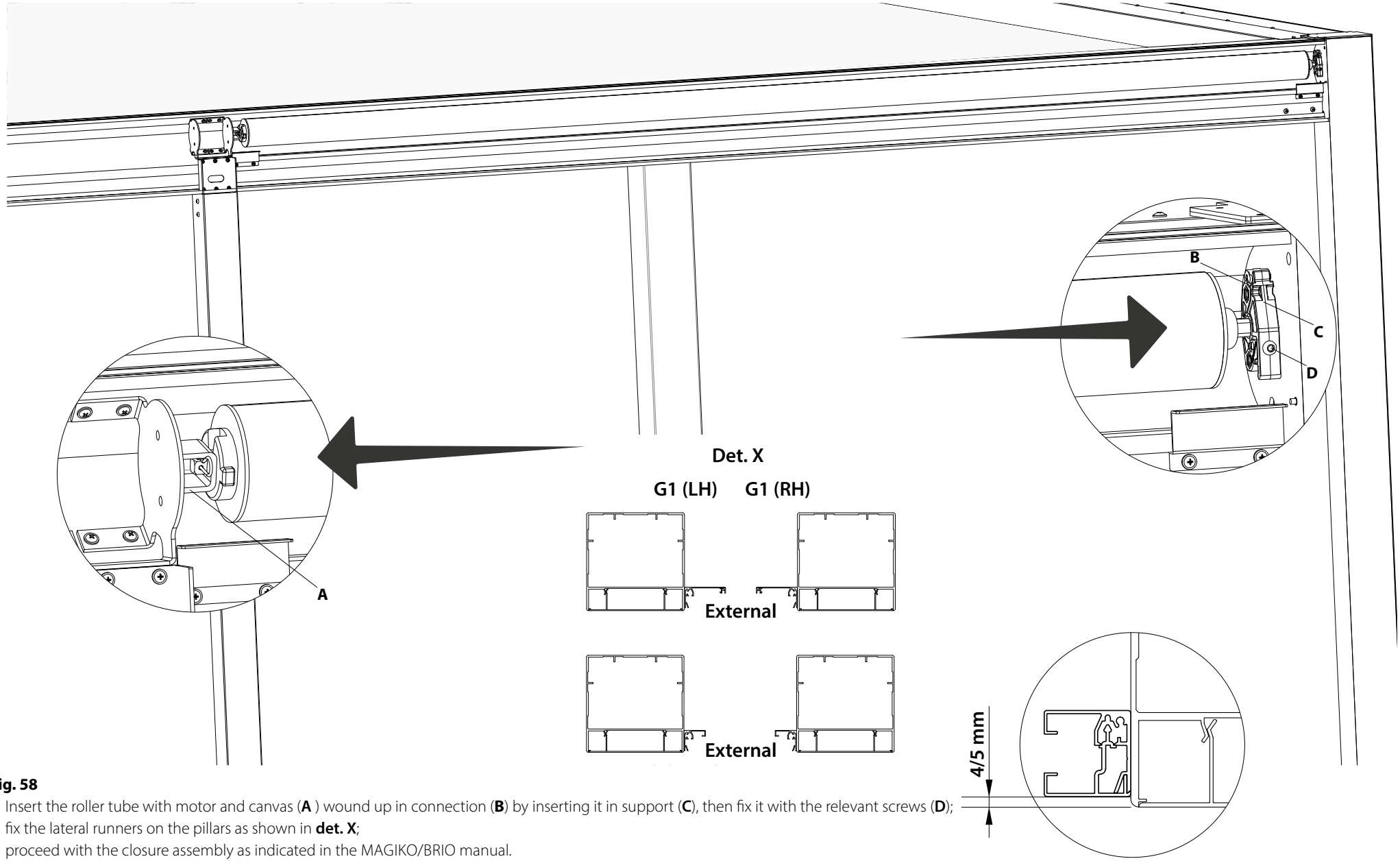

Fig. 58

- Insert the roller tube with motor and canvas (**A**) wound up in connection (**B**) by inserting it in support (**C**), then fix it with the relevant screws (**D**);
- fix the lateral runners on the pillars as shown in **det. X**;
- proceed with the closure assembly as indicated in the MAGIKO/BRIO manual.

NOTE: the side runners must be installed with the mobile profile outside (contrary to what described on the MAGIKO/BRIO installation manual).

17 SCREEN INSTALLATION

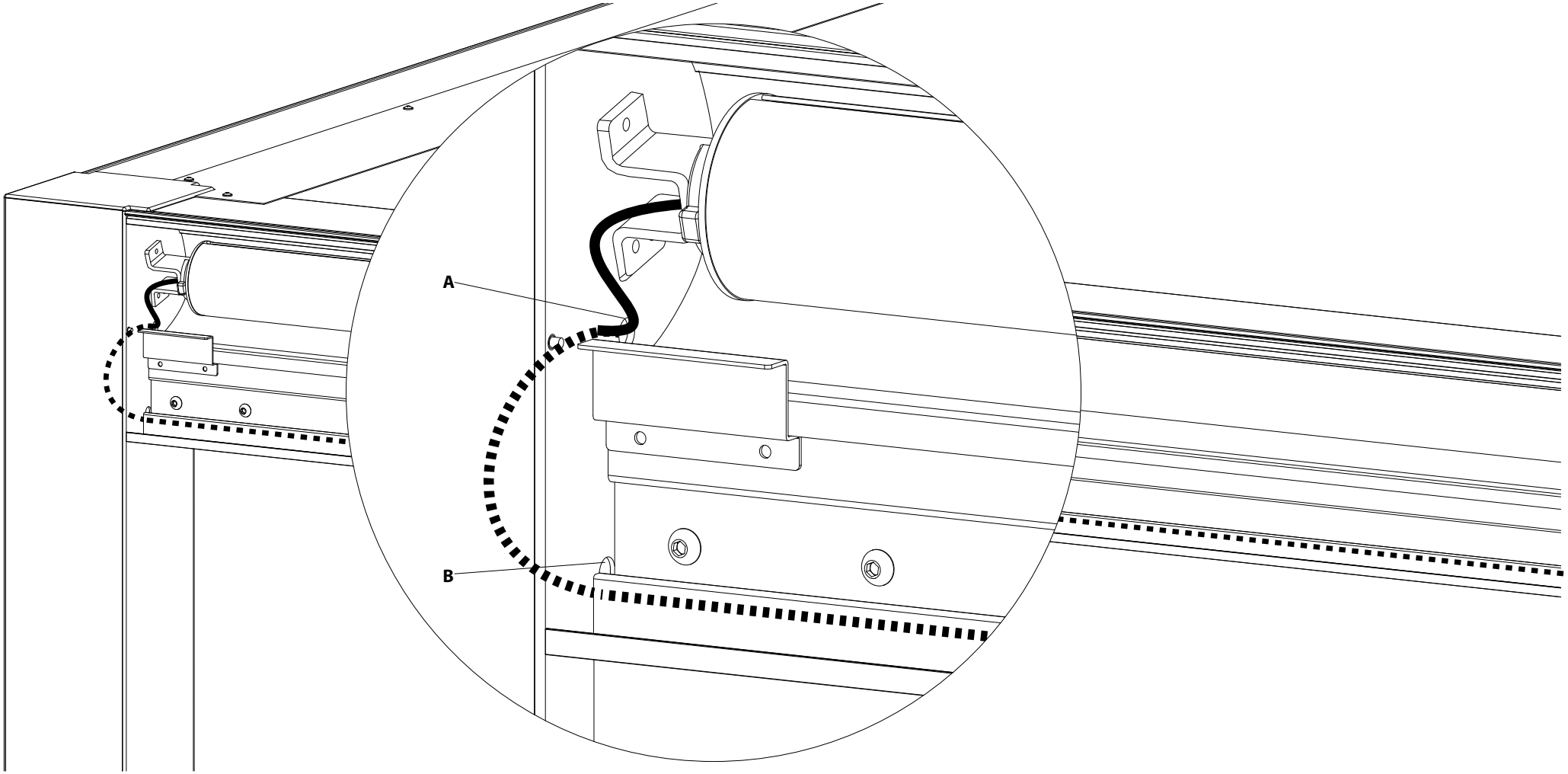

Fig. 59

- The wirings must be distributed on the perimeter, using the channels, by introducing them into holes (**A**) and (**B**).

18 SLIDING GLASS DOORS INSTALLATION

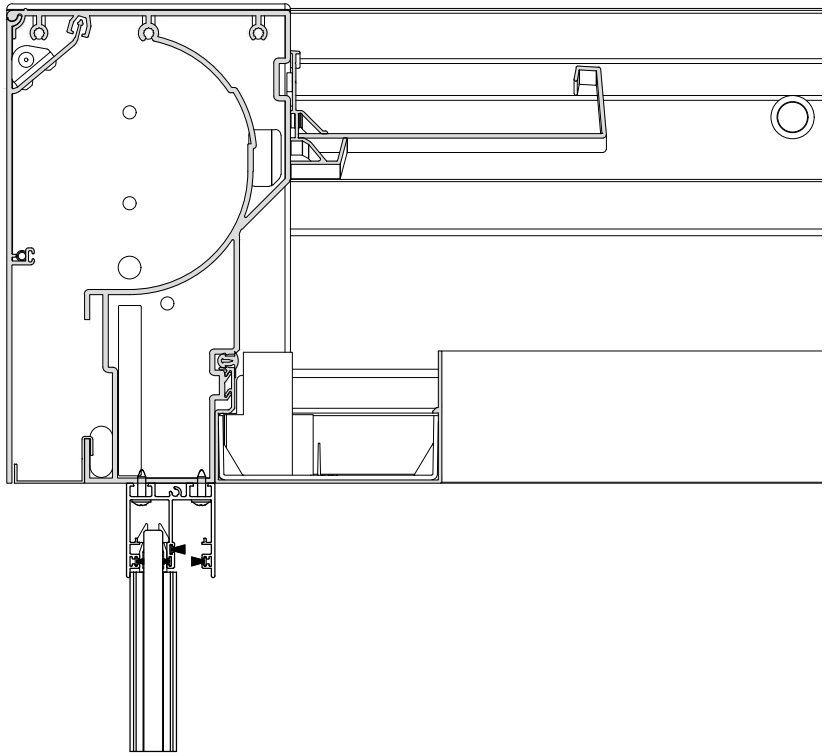

Fig. 60
Configuration with or without intermediate pillar.
A - 2 Ways 2 Doors.
B - 2 Ways 4 Doors.
- Fix with the self-drilling screws having care not to drill the gutter.

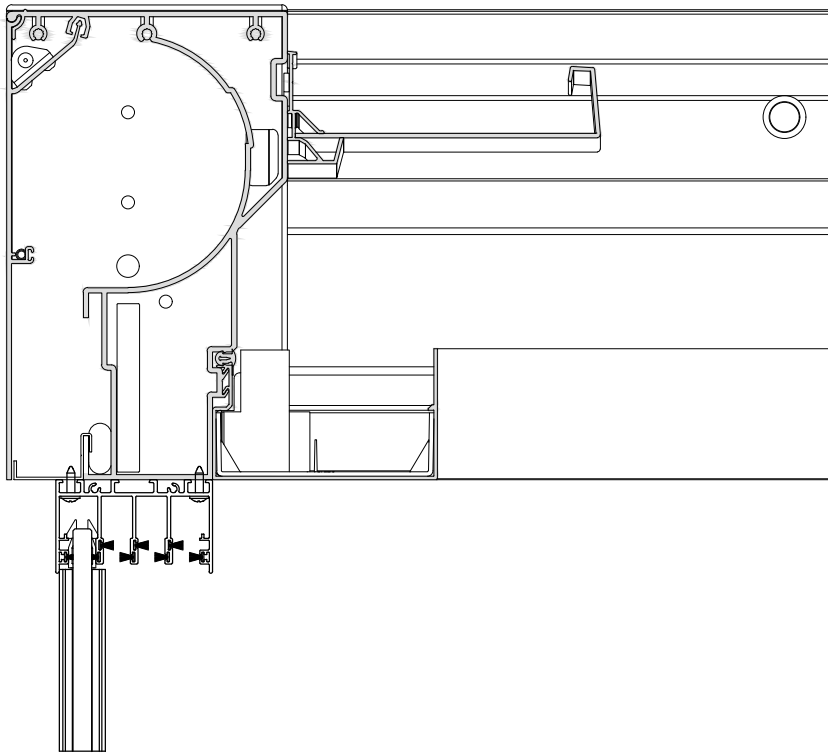

Fig. 61
Configuration with or without intermediate pillar.
C - 3 Ways 3 Doors.
- Fix with the self-drilling screws having care not to drill the gutter.

19 CASING INSTALLATION

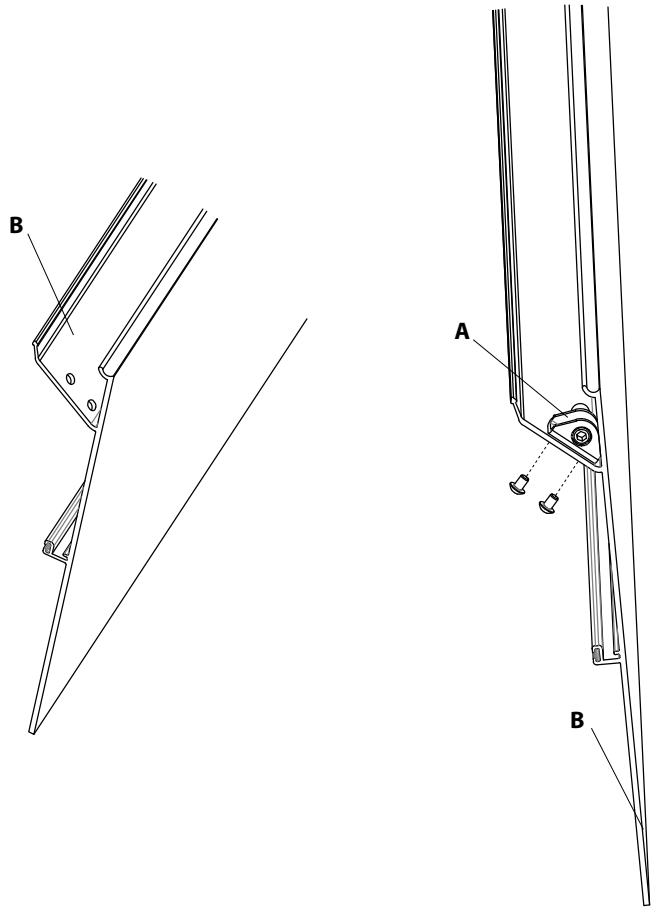

Fig. 62
Fix the additional safety block **(A)** to the cover **(B)** of the beam in correspondence of the holes, where present.
Repeat on both cover sides.

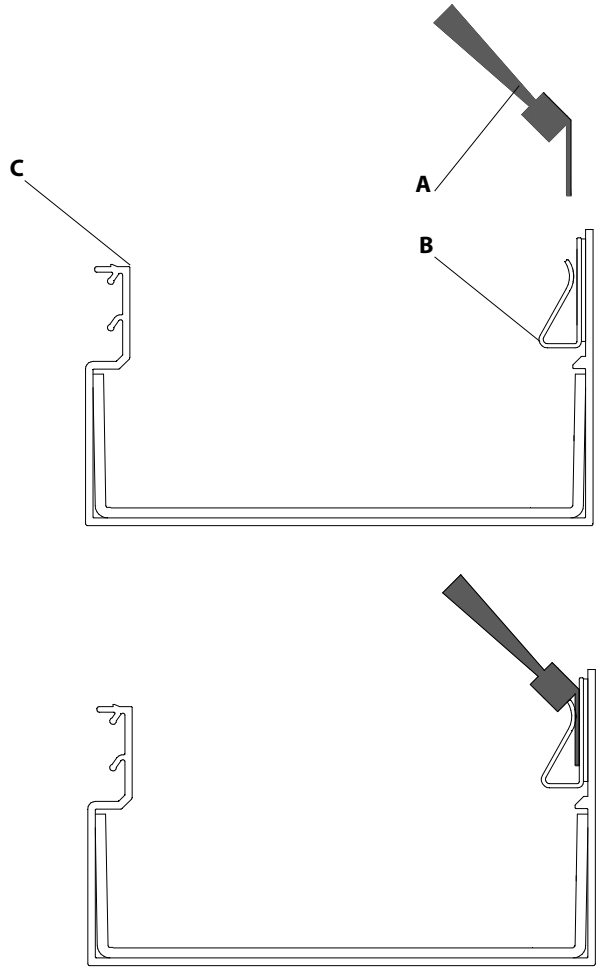

Fig. 63
On the pivot sides, hook the brush **(A)** to the plastic supports **(B)** already present inside the gutter **(C)**.

19 CASING INSTALLATION

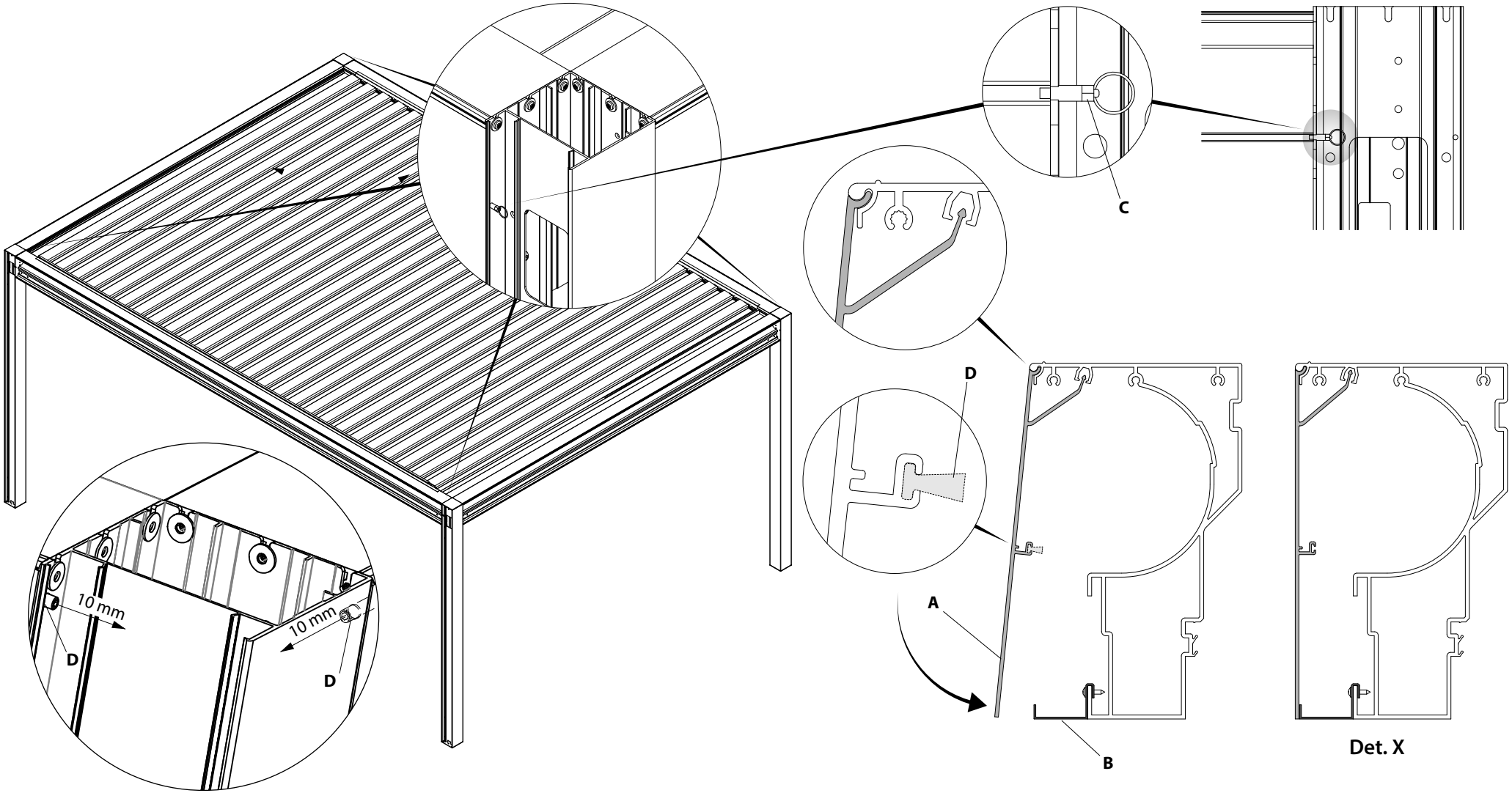

Fig. 64

- Fit casings (**A**) by introducing them slightly inclined into the coupling seats on the crossbeams, then rotate them and bring them against the profiles (**B**) (**Det. X**);
- block casings (**A**) by means of the lateral stops (**C**).
- let the screw **(D)** project of approx. 10 mm.

ATTENTION: if SCREENS is to be installed, insert the "brush" profile (**D**) (in the SCREENS accessories box) in the relevant space on the external casing before fitting it on the structure.

19 CASING INSTALLATION

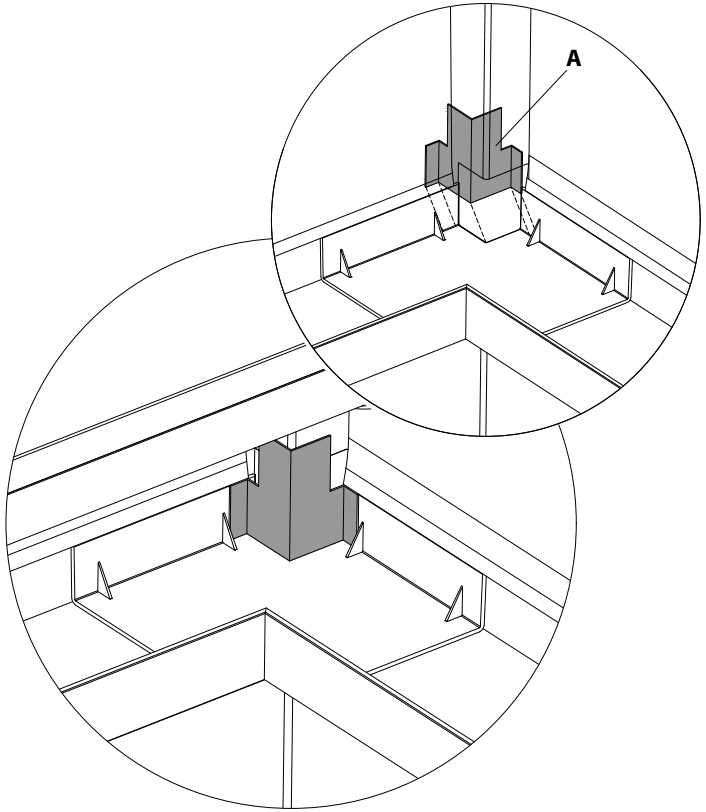

Fig. 65
Fit the angle plate **(A)**.
Repeat on each drain.

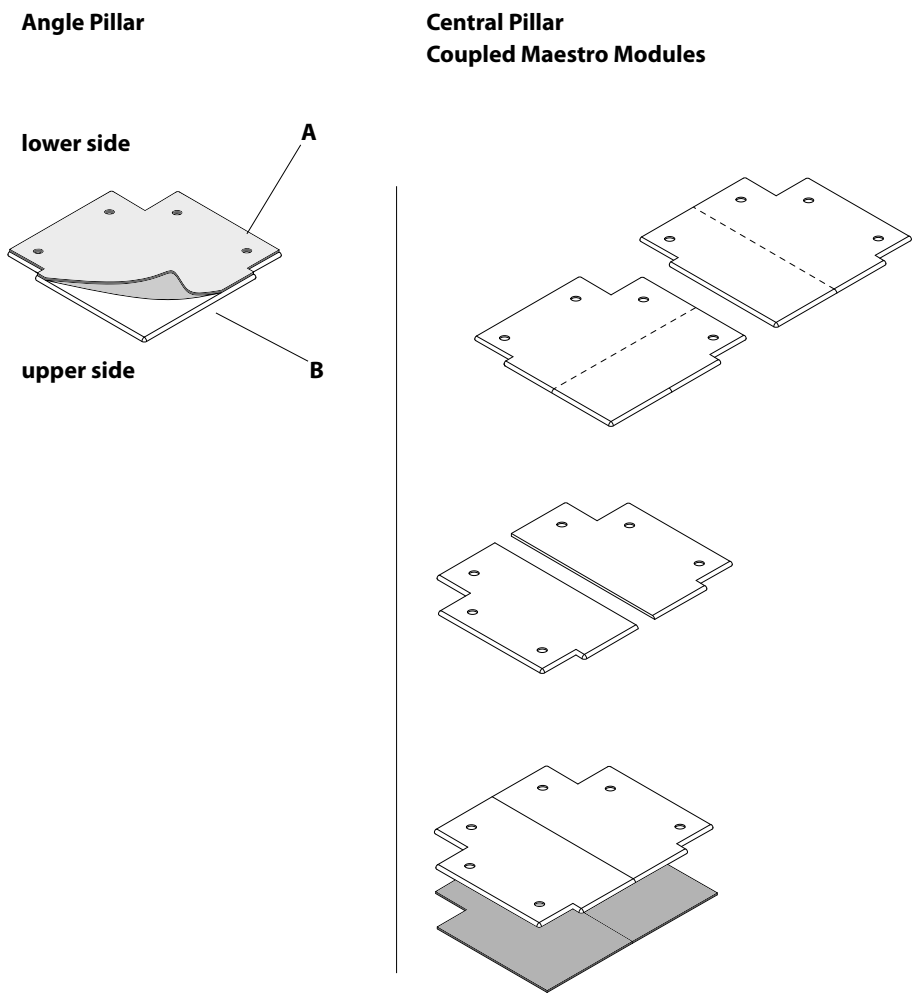

Fig. 66
Apply the punched sticker **(A)** to the cover **(B)**.
In case of coupled maestro modules, in the pillar shared by the modules, cut two covers along the dotted line (halfway) and apply the punched stickers cut in the same way.
NOTE: the punched sticker must be applied to the lower side of the cover.

19 CASING INSTALLATION

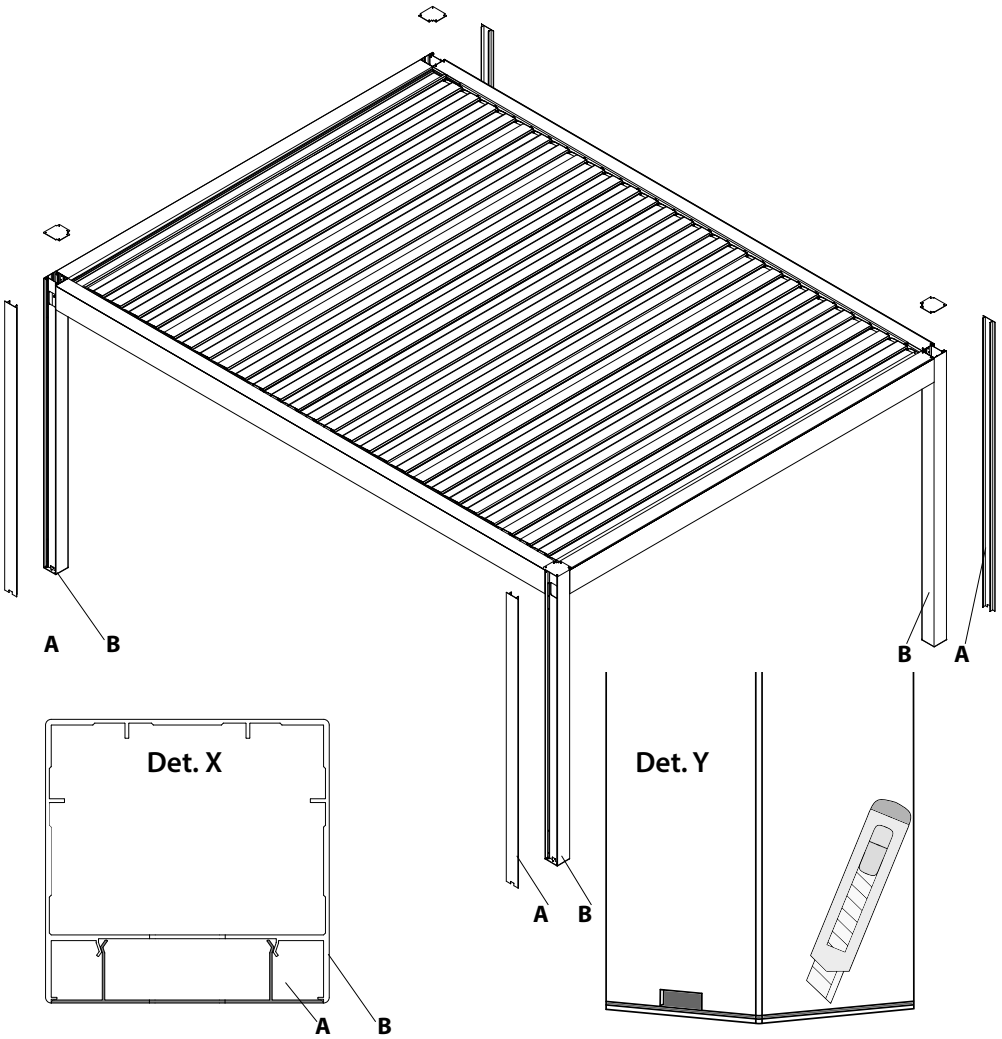

Fig. 68

- Engage casings (**A**) in the relevant engagement seats on pillars (**B**), see (**det. X**);
- Trim the excess punched sticker with a cutter paying attention not to scratch the aluminium profile (**Det. Y**).

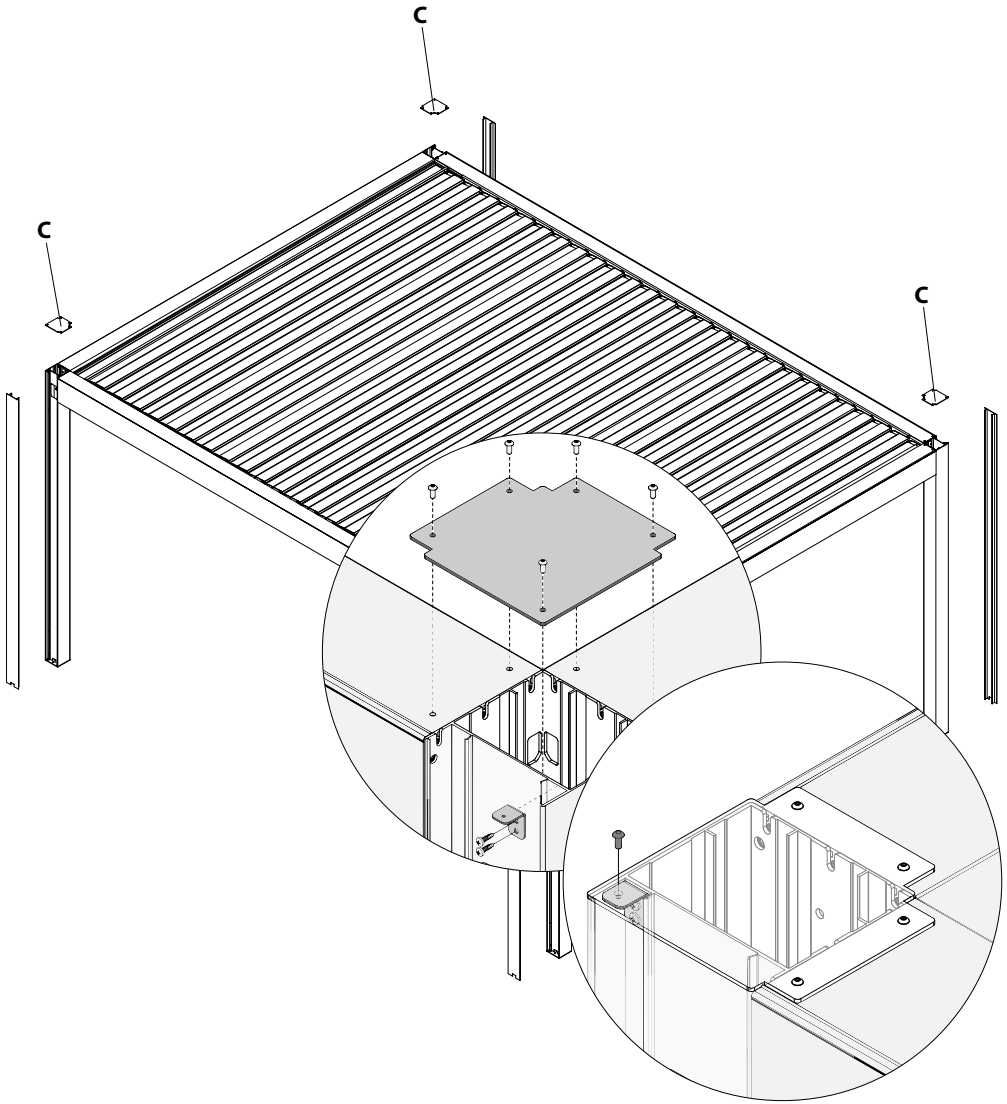

Fig. 67

- Position the four plugs (**C**) in the upper side of the pillars and tighten with self-drilling screws.

20 WALL-MOUNTED OPTION

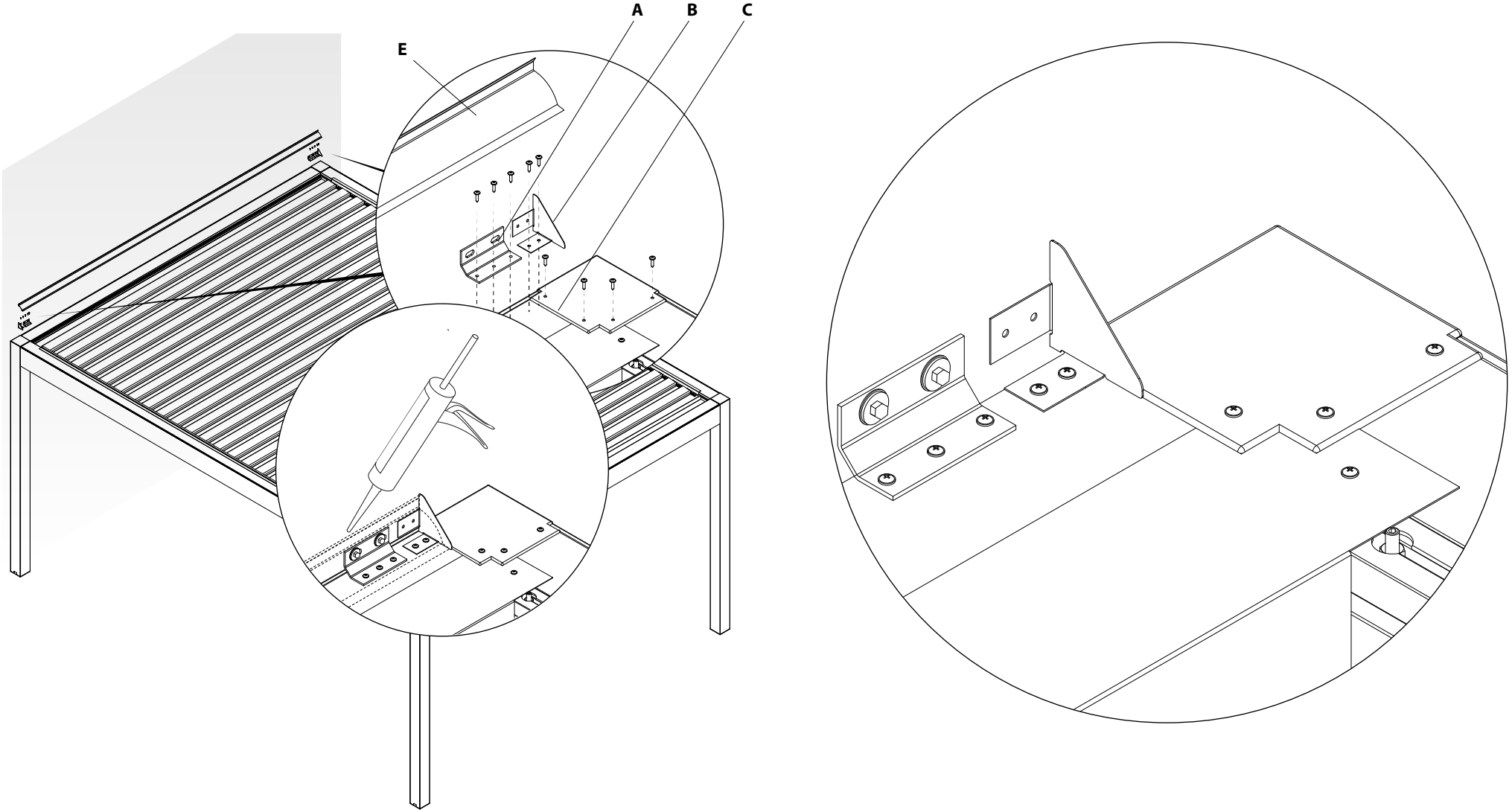

fig. 69

- On the structure left and right side, use self-drilling screws to fix the angle bar (**A**) and (**B**) to the crossbeam (**C**);
- fix plates (**A**), previously screwed to the structure, to the wall using suitable fixing systems (**D**) (not supplied by Corradi);
- use the upper profile (**E**) to close, and use the self-drilling screws to fix it to the structure;
- apply silicone along the entire profile close to the wall.

21 WALL-MOUNTED OPTION WITHOUT PILLARS

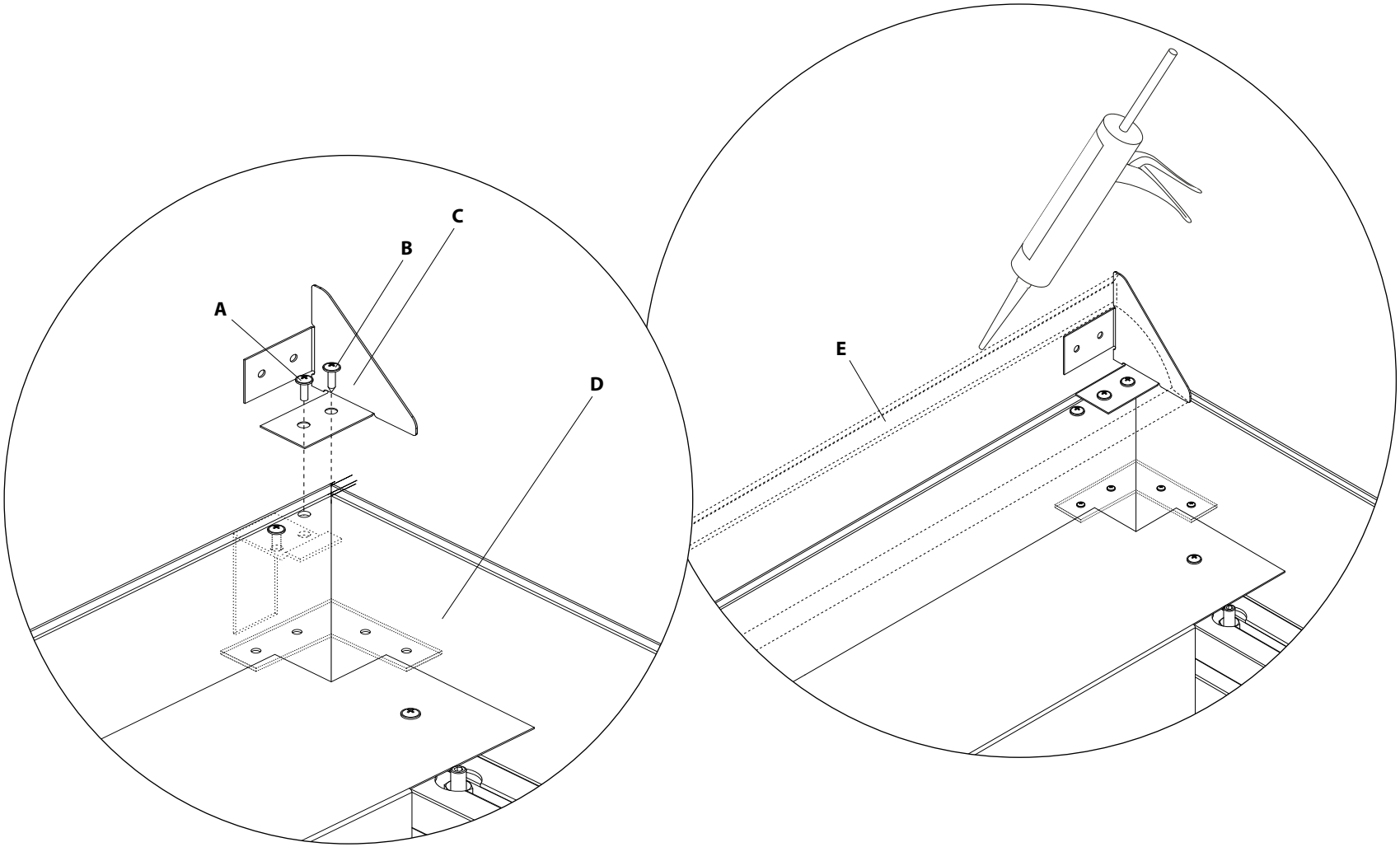

Fig. 70

- Loosen the pre-assembled screw (**A**) and fix the angle plate (**C**) to the crossbeam (**D**) with the pre-assembled screw and a self-drilling screw (**B**);
- fix the angle plate (**C**) to the wall using the suitable fastening systems (not supplied by Corradi);
- use the upper profile (**E**) to close, and use the self-drilling screws to fix it to the structure;
- apply silicone along the entire profile close to the wall.

22 SILICONE APPLICATION EXTERNAL AREAS

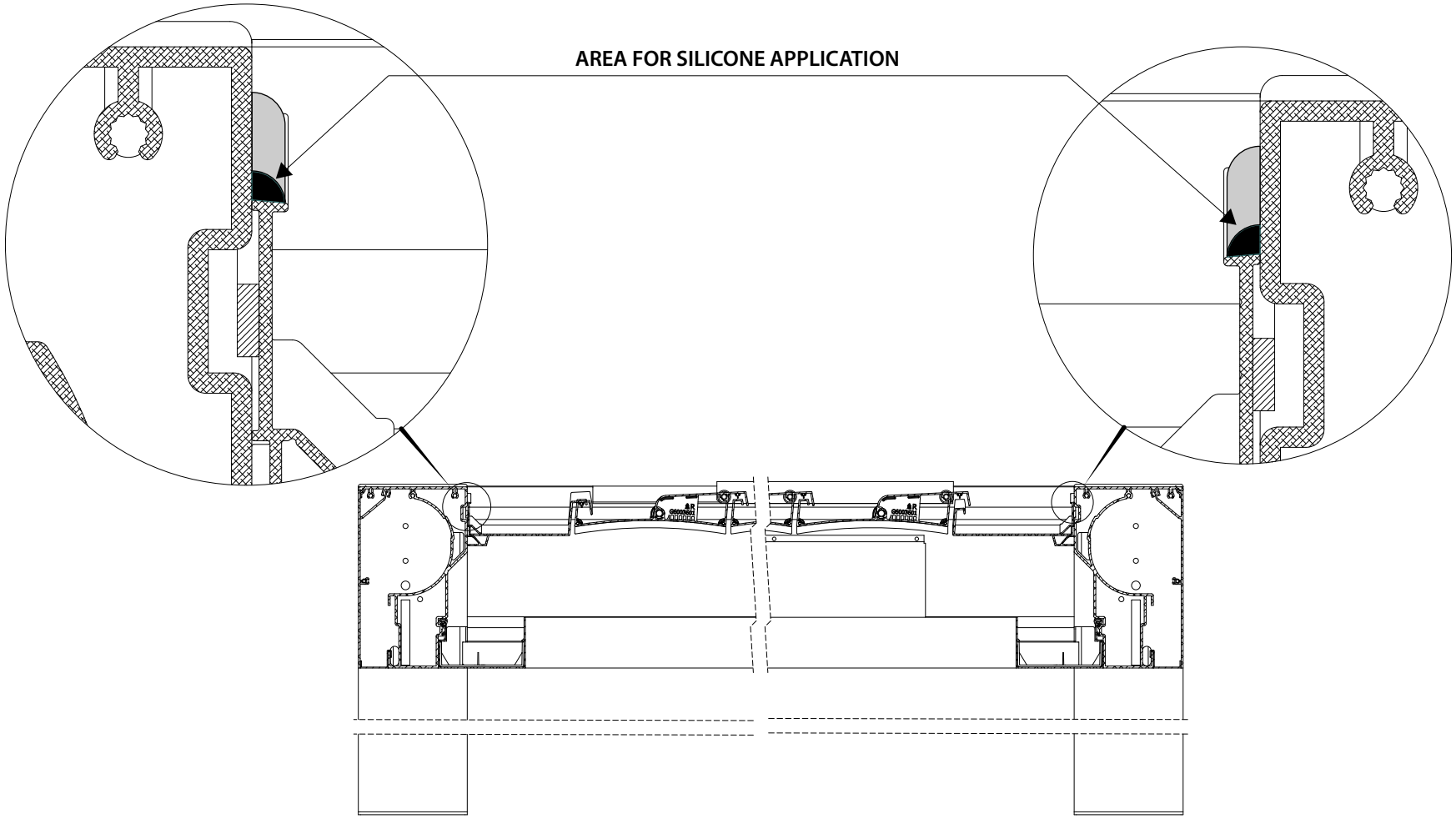

Fig. 71

- Apply silicone on the areas shown in the figure, spreading it on the whole length.

ELECTRIC SYSTEM

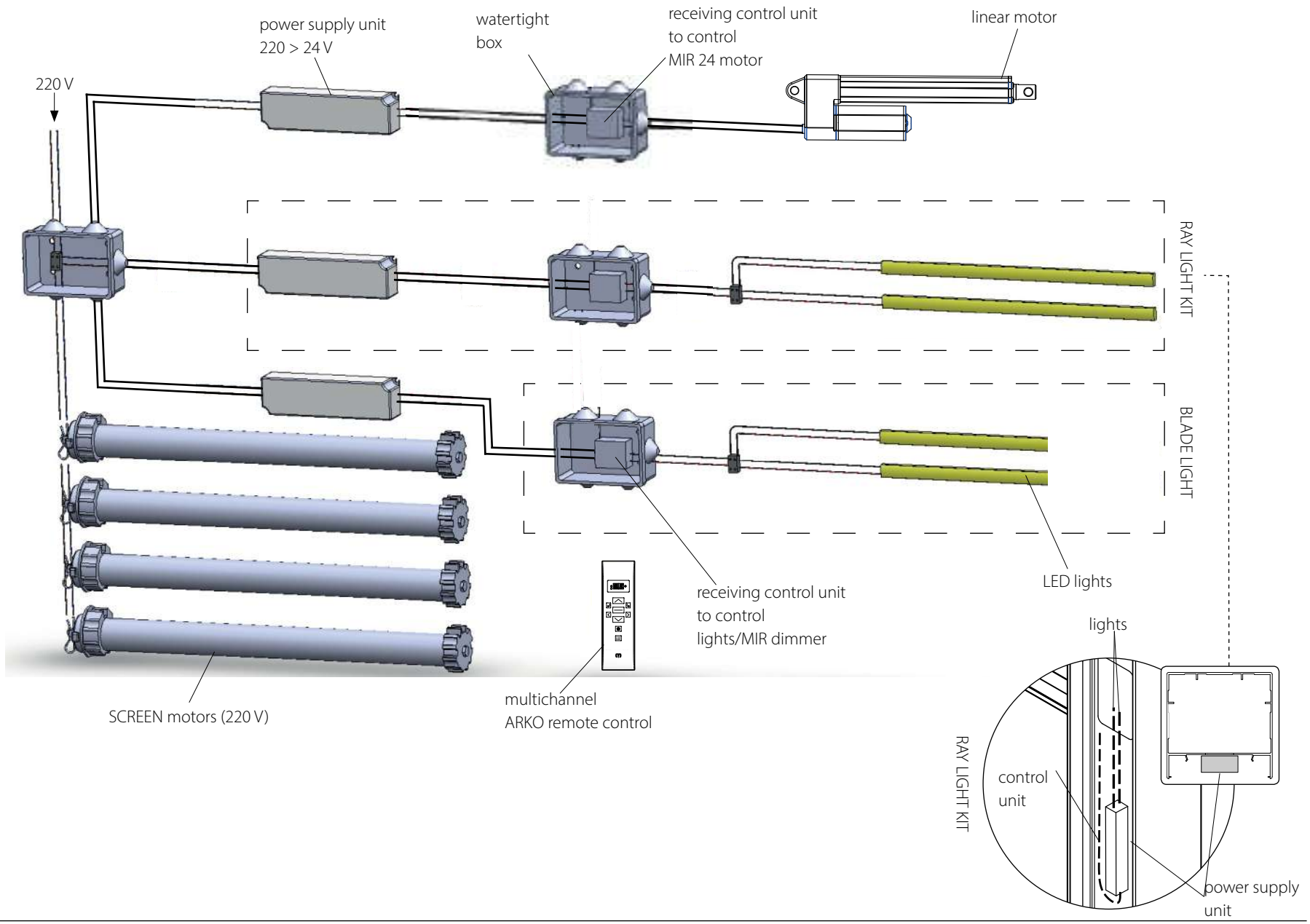

TABLES

TAB.1 WIND RESISTANCE OF BIOCLIMATIC MAESTRO
Wind resistance classes according to EN 13561: 2015
Cover
Class 3= 110 N/sq.m= 47 km/h (open blade) Class 6= 400 N/sq.m= 100 km/h (closed blade)
Side closures
Side closures= 110 N/sq.m = 47 km/h
(attention: The value must be compared with the resistance value of the side closure)

TAB.2 TRACTION EFFORT ON FOOT DOWEL - BIOCLIMATIC MAESTRO
Maximum effort* [daN=1Kg] on single traction dowel considering 4 bolts per feet
and a 300 cm high structure. Values relating to the corresponding classes specified in table 1.

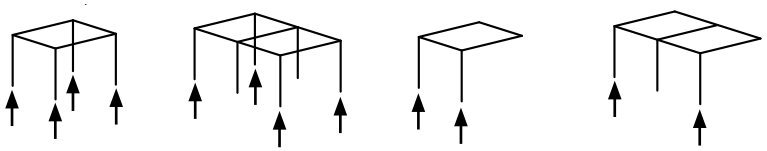

PIVOT (cm)	SPAN (cm) 300	400	470
300	710	710	710
400	710	860	990
500	930	1080	1670
620	1100	1450	2250

*The indicated values must be considered in combination to a shear effort on the single dowel equal to 120 daN

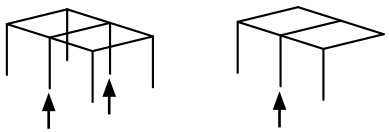

Maximum effort** [daN=1Kg] on single traction dowel considering 4 bolts per foot
and a 300 cm high structure. Values relating to the corresponding classes specified in table 1.

2250 daN

**The indicated values must be considered in combination to a shear effort on the single dowel equal to 240 daN

TAB.3 TRACTION EFFORT ON WALL DOWEL - BIOCLIMATIC MAESTRO
Maximum traction effort in daN (1 daN~1 Kg) on the single wall dowel.
Values relating to the corresponding classes specified in table 1.

PIVOT (cm)	SPAN (cm) 300	400	470
300	990	1250	1470
400	1780	2240	2250
500	2250	2250	2250
620	2250	2250	2250

TAB.4 SHEAR EFFORT ON WALL DOWEL - BIOCLIMATIC MAESTRO
Maximum shear effort in daN (1 daN~1 Kg) on the single wall dowel.
Values relating to the corresponding classes specified in table 1.

PIVOT (cm)	SPAN (cm) 300	400	470
300	380	470	540
400	490	610	710
500	590	730	9100
620	770	770	1130

EXAMPLE - DETERMINATION OF THE WIND RESISTANCE ACCORDING TO THE LOADS AND THE DOWELS

Determination of maximum load on dowel.

Based on the dimensions of the structure and on the runner number, enter in the load tables 3, 4, 5 or 6 (according to the resistance at the desired wind speed) and identify the maximum load on the single dowel. The obtained value is expressed in daN (1daN ≈ 1kg).

In the example below the input data are:

- Width: 550 cm
- Projection: 350 cm
- Runner number: 3
- Maximum desired wind speed: 49 km/h

TABLE 4 - Maximum load in daN (1daN ≈ 1kg) on the single dowel (considering 2 dowels with counterplate (optional) or 4 dowels without counterplate, for each foot support and 2 dowels per wall support) traction and shear (not combined) for a maximum wind speed of 49 km/h (Beaufort Scale 6 - Class 3 according to EN 13561)

Projection (cm) \ Width (cm)	200	250	300	350	400	450	500	550	600	650	700	750
250	35	41	47	53	59	65	76	82	88	94	100	106
300	40	47	54	61	68	75	88	95	102	109	116	123
350	46	54	62	70	78	86	100	108	116	124	132	140
400	51	60	69	787	87	96	112	121	130	139	148	157
450	56	66	76	86	96	106	123	133	144	154	164	174
500	61	72	83	94	105	117	135	146	157	168	179	191
550	67	79	91	103	115	127	147	159	171	183	195	207
600	72	85	98	11	124	137	159	172	185	198	211	224
650	77	91	105	119	133	147	171	185	199	213	227	241
	2 runners							3 runners				

Abstract from table of maximum loads on single dowel

It follows that:

- Maximum load on single dowel: 108 daN

For the determination of the fixing system see paragraph on the side.

Attention

The load indicated in the tables is the maximum load in daN on the single dowel (considering 2 dowels for each support) for traction and shear (not combined)

Determination of Anchoring System

According to the type of support on which the dowels are to be fixed, refer to the selected fixing system manufacturer manual to identify the most suitable system.

Dowels must comply with what stated in table 6.

Anchoring systems on	Standards, Regulations, Reference Guidelines
concrete	Guidelines ETAG 001 Qualification and dimensioning of metal anchors for use in concrete
	Technical Report EOTA TR029 Design of bonded anchors
	ETAG001 Annex E Qualification of metal anchors for use in concrete under seismic action
	Technical Report EOTA TR045 Design of metal anchors for use in concrete under seismic action
	Technical Report EOTA TR020 Evaluation of anchorages in concrete concerning resistance to fire
masonry	Guidelines ETAG 029 Qualification and dimensioning of metal injection anchors for use in masonry
	Guidelines ETAG 020 Plastic anchors

Table 6 - Reference regulations for anchoring systems

For most of the applications category C2 of seismic performance is required (see table 7).

Seismic acceleration	Structural applications		Non-structural applications	
	Use class IV	Use class II/III	Use class IV	Use class II/III
<0.05 g	ETA (no seismic)			
0.05-0.1	ETA C2			ETA C1
> 0.1g	ETA C2			

Table 7 - Seismic performance categories for dowels (ETAG001, Annex E)

Load comparison

The recommended load to be used as comparison is the **lower** one between the traction and the shearing load.

The **lower** one between the maximum traction recommended load and the shearing one must be higher than or equal to the maximum load on single dowel identified from the load table relevant to the desired wind speed. Vice versa, if the recommended load is lower than the maximum load on the dowel, assess the following options:

A) change the type of dowel

B) Duly reinforce the wall or the floor

C) Refer to a load table in case of a lower wind speed and assign the installed product to the relevant wind resistance.

Attention

For a correct selection of the dowels, **exclusively refer to the manual provided by the fixing system manufacturer.**

THE
outdoor
ALCHEMIST

corradi.eu

Corradi
OUTDOOR LIVING SPACE

Rev.1 - 05.2019 - Cod. 1-LC 658701

Corradi srl
Via M. Serenari, 20 • 40013 Castel Maggiore (BO), Italy
T +39 051 4188411 • **F** +39 051 4188400
hello@corradi.eu

www.corradi.eu